SECTION PG

POWER SUPPLY, GROUND & CIRCUIT ELEMENTS

CONTENTS

POWER SUPPLY ROUTING **2**
Schematic 2
Wiring Diagram — POWER — 3
BATTERY POWER SUPPLY — IGNITION SW. IN ANY POSITION 3
ACCESSORY POWER SUPPLY — IGNITION SW. IN “ACC” OR “ON” 7
IGNITION POWER SUPPLY — IGNITION SW. IN “ON” AND/OR “START” 8
Fuse 12
Fusible Link 12
Circuit Breaker 12
GROUND **13**
Ground Distribution 13
MAIN HARNESS 13
ENGINE ROOM HARNESS 16
ENGINE CONTROL HARNESS 18
BODY HARNESS 19
BODY NO. 2 HARNESS 20
ROOM LAMP HARNESS 21
BACK DOOR SUB HARNESS/REAR WINDOW DEFOGGER HARNESS 22
HARNESS **23**
Harness Layout 23
HOW TO READ HARNESS LAYOUTS 23
OUTLINE 24
MAIN HARNESS 25
ENGINE ROOM HARNESS 27
ENGINE CONTROL HARNESS 32
BODY HARNESS 34
BODY NO. 2 HARNESS 35
ROOM LAMP HARNESS 36
FRONT DOOR HARNESS 37
REAR DOOR HARNESS 38
BACK DOOR HARNESS 39
Wiring Diagram Codes (Cell Codes) 40
ELECTRICAL UNITS LOCATION **43**
Electrical Units Location 43
ENGINE COMPARTMENT 43
PASSENGER COMPARTMENT 44
HARNESS CONNECTOR **46**
Description 46
HARNESS CONNECTOR (TAB-LOCKING TYPE) 46
HARNESS CONNECTOR (SLIDE-LOCKING TYPE) 47
ELECTRICAL UNITS **48**
Terminal Arrangement 48
STANDARDIZED RELAY **49**
Description 49
NORMAL OPEN, NORMAL CLOSED AND MIXED TYPE RELAYS 49
TYPE OF STANDARDIZED RELAYS 49
FUSE BLOCK - JUNCTION BOX (J/B) **51**
Terminal Arrangement 51
FUSE AND FUSIBLE LINK BOX **52**
Terminal Arrangement 52

POWER SUPPLY ROUTING

PFP:00011

Schematic

AKS00BER

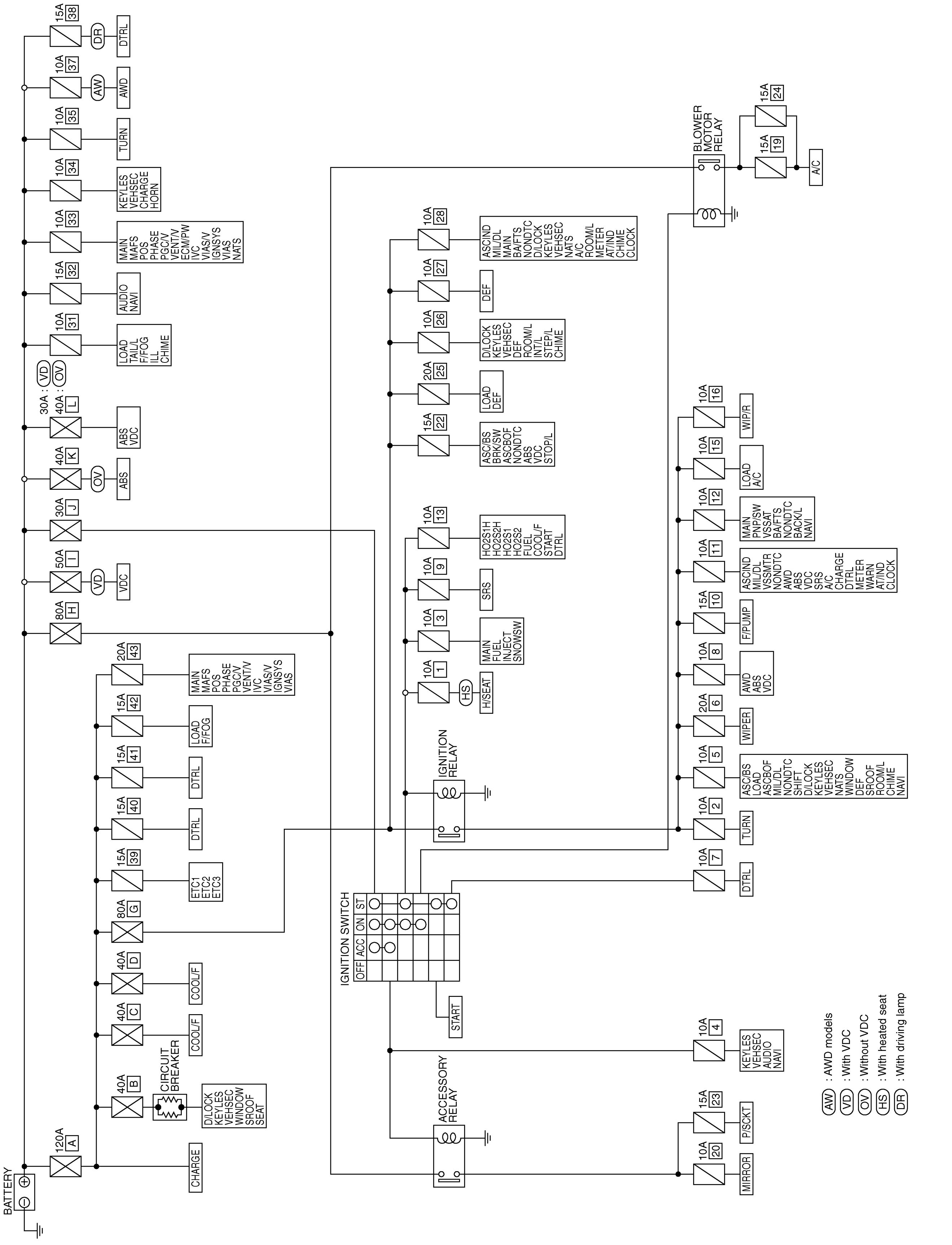

TKWB2274E

Wiring Diagram — POWER —

AKS00BES

BATTERY POWER SUPPLY — IGNITION SW. IN ANY POSITION

PG-POWER-01

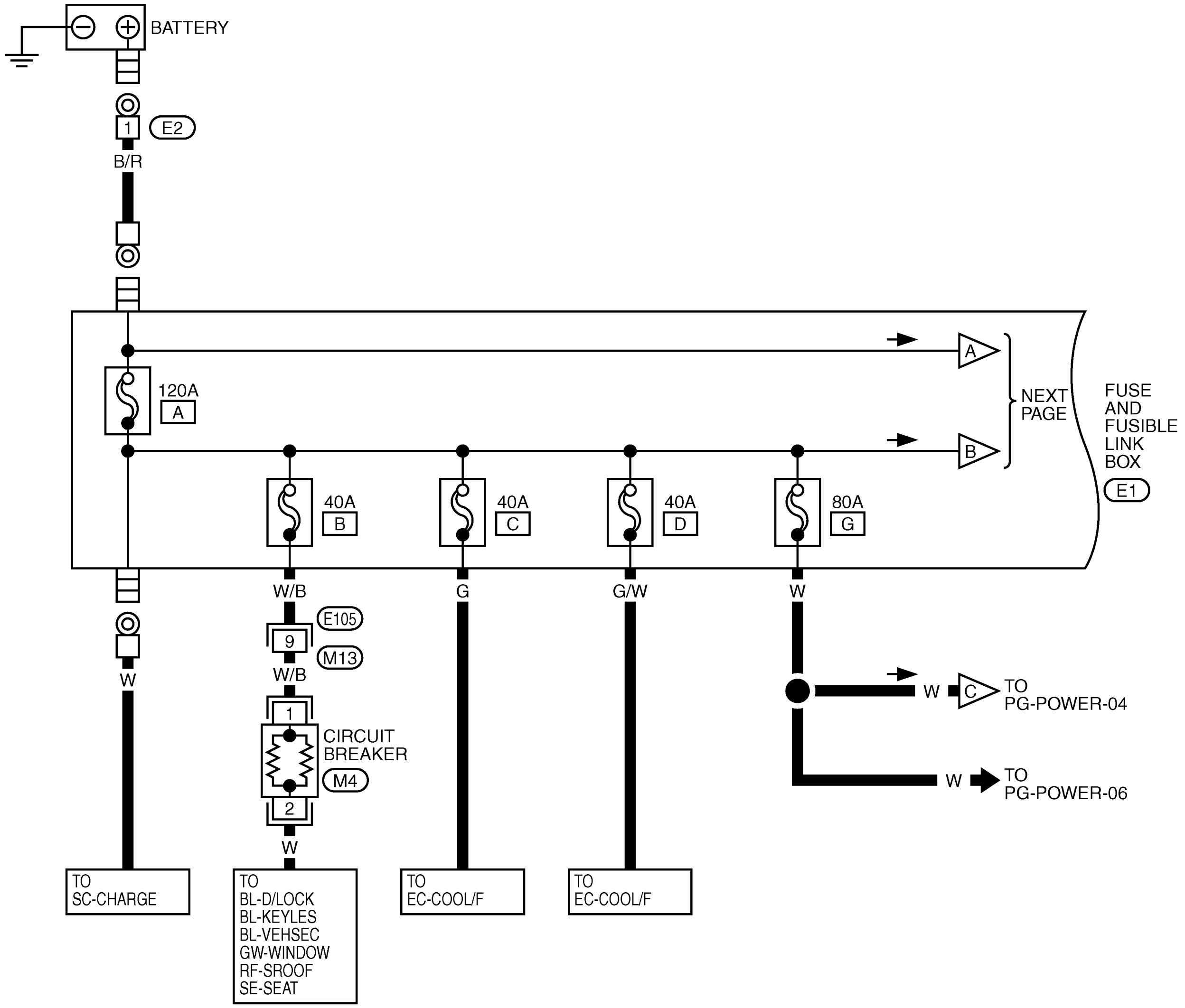

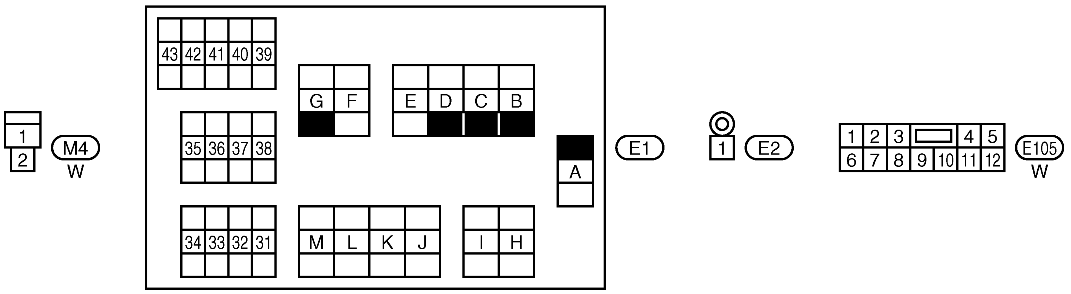

TKWB0203E

PG-POWER-02

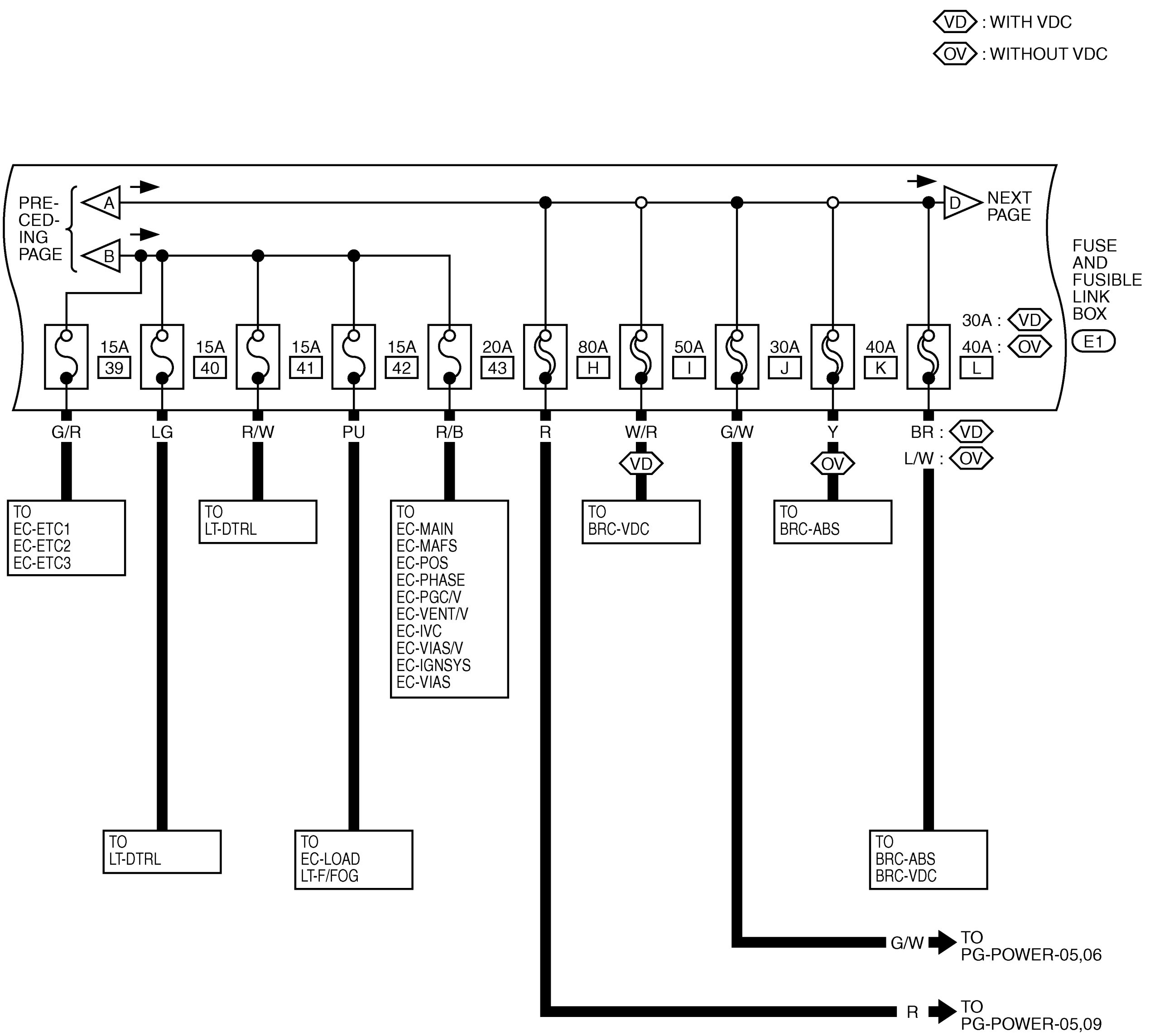

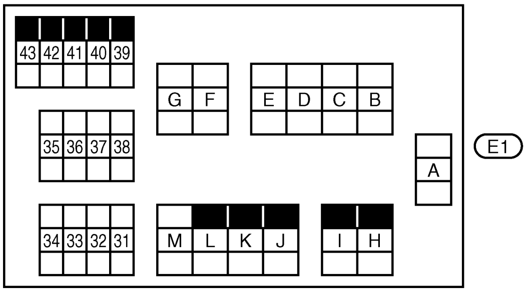

TKWB0204E

PG-POWER-03

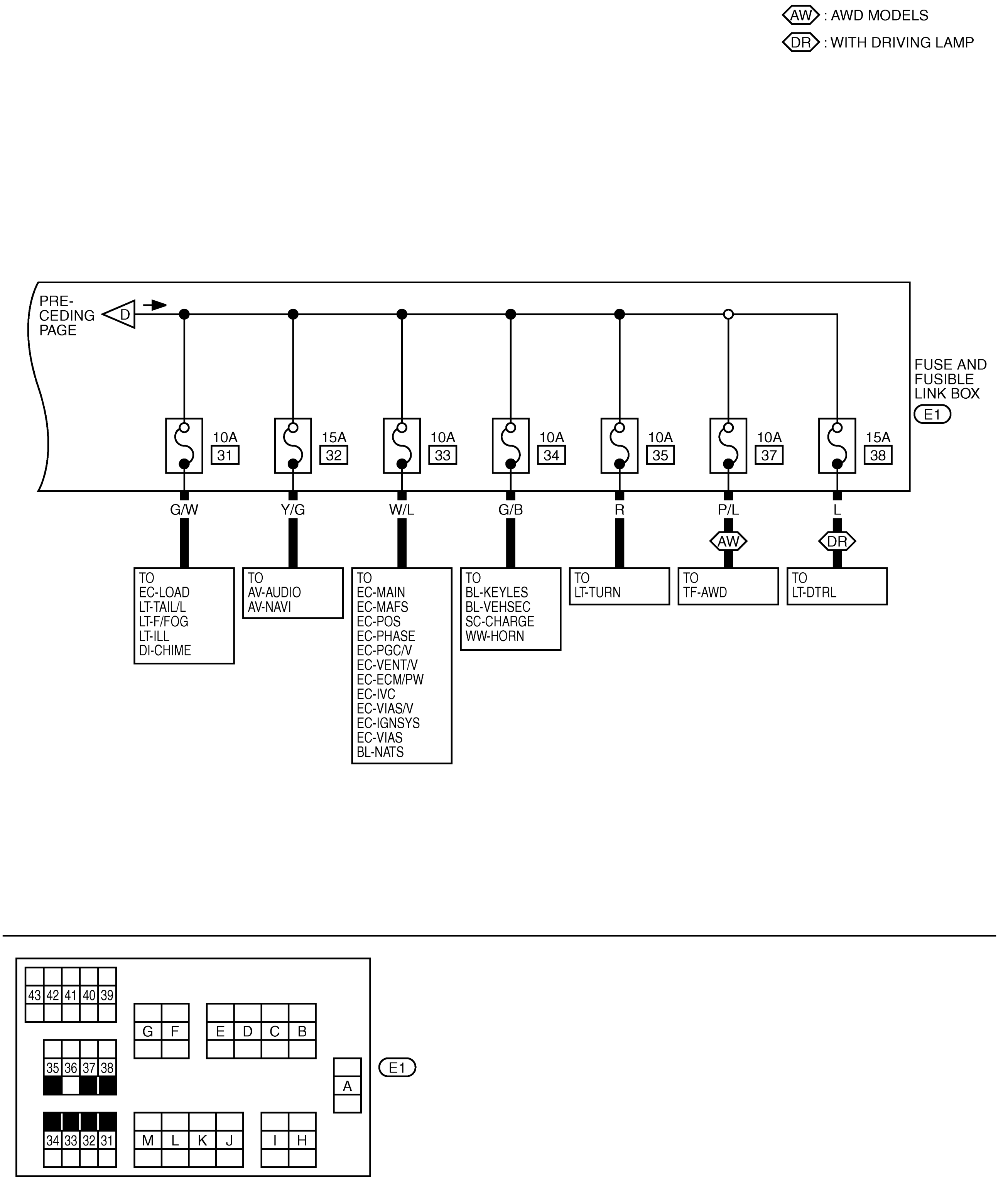
AW : AWD MODELS
DR : WITH DRIVING LAMP
PRE-CEDING PAGE
D
FUSE AND FUSIBLE LINK BOX
E1
10A 31
15A 32
10A 33
10A 34
10A 35
10A 37
15A 38
G/W
Y/G
W/L
G/B
R
P/L
L
AW
DR
TO EC-LOAD LT-TAIL/L LT-F/FOG LT-ILL DI-CHIME
TO AV-AUDIO AV-NAVI
TO EC-MAIN EC-MAFS EC-POS EC-PHASE EC-PGC/V EC-VENT/V EC-ECM/PW EC-IVC EC-VIAS/V EC-IGNSYS EC-VIAS BL-NATS
TO BL-KEYLES BL-VEHSEC SC-CHARGE WW-HORN
TO LT-TURN
TO TF-AWD
TO LT-DTRL
43 42 41 40 39
G F
E D C B
35 36 37 38
A
E1
34 33 32 31
M L K J
I H
TKWB2275E

PG-POWER-04

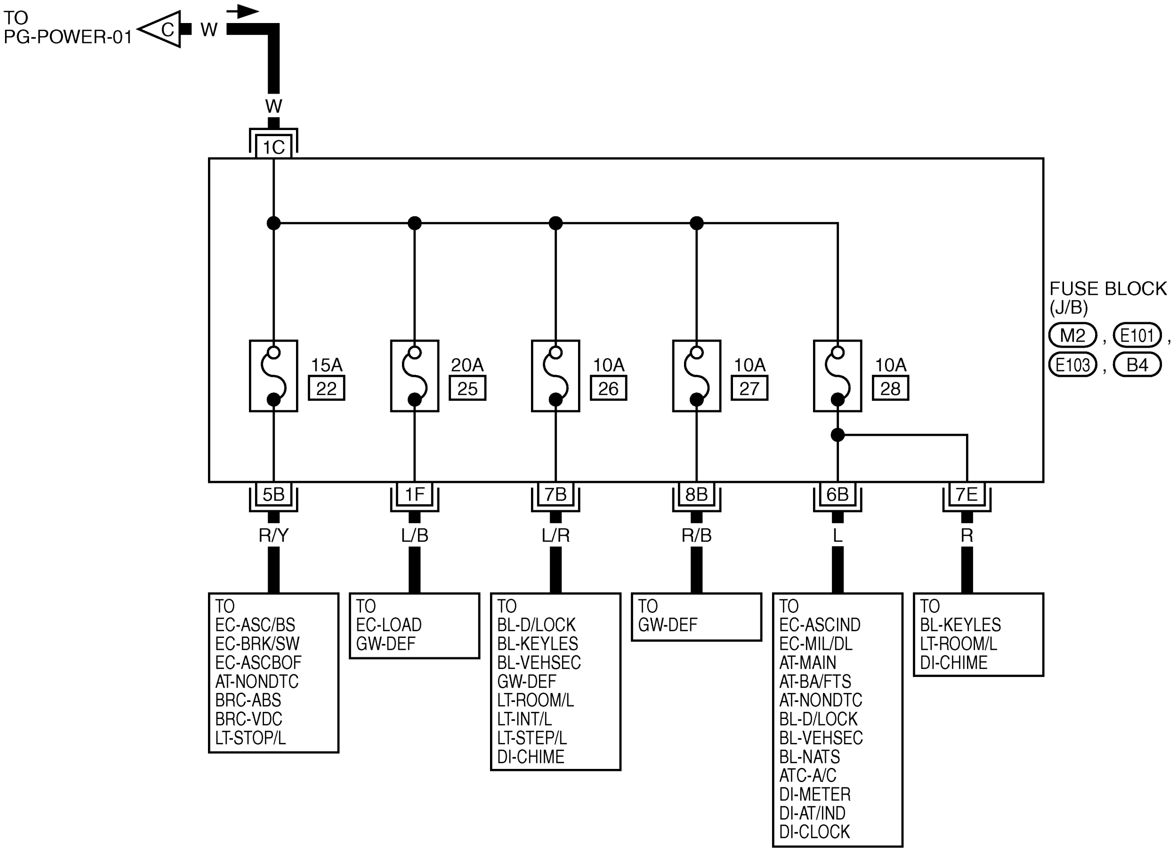

REFER TO THE FOLLOWING.

M2, E101, E103, B4
-FUSE BLOCK-JUNCTION BOX (J/B)

28		20	15	10	5
	24	19	14	9	4
27	23	18	13	8	3
26	22	17	12	7	2
25	21	16	11	6	1

UP

TKWB0206E

ACCESSORY POWER SUPPLY — IGNITION SW. IN “ACC” OR “ON”

PG-POWER-05

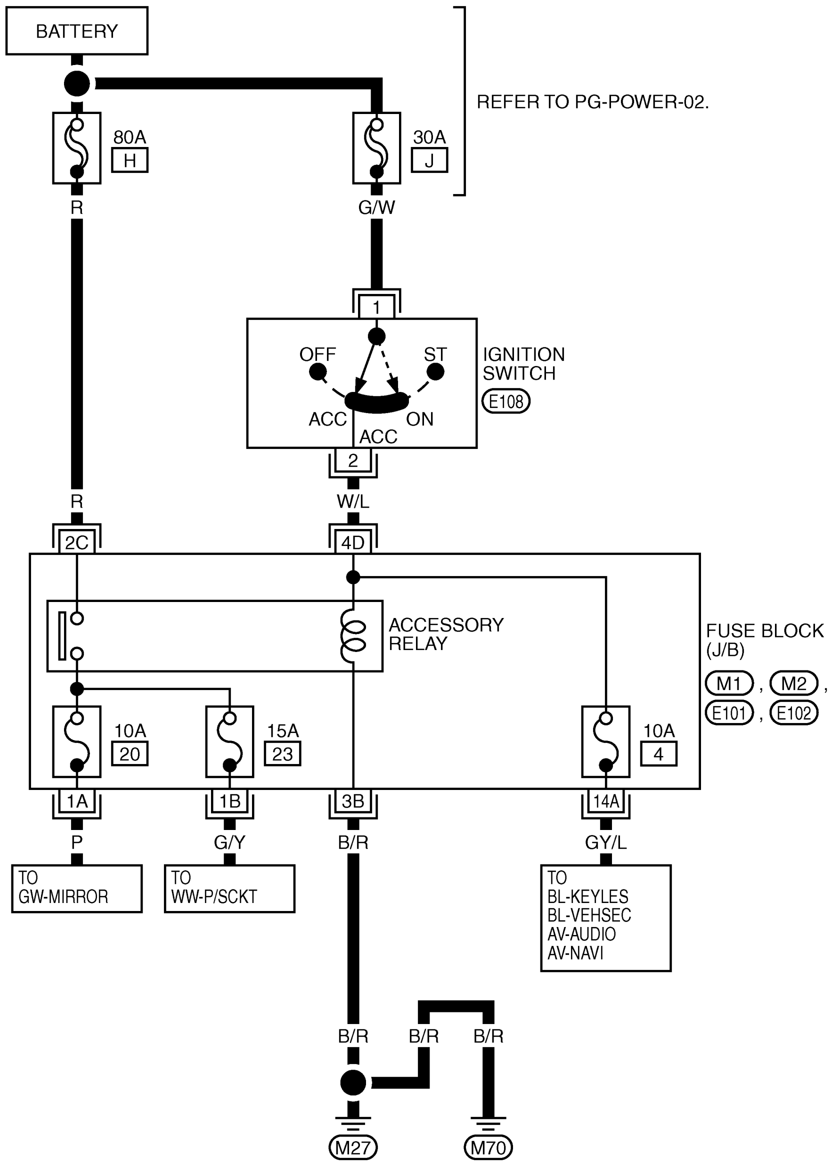

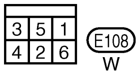

REFER TO THE FOLLOWING.

M1, M2, E101, E102 -FUSE BLOCK-JUNCTION BOX (J/B)

28		20	15	10	5
	24	19	14	9	4
27	23	18	13	8	3
26	22	17	12	7	2
25	21	16	11	6	1

UP

TKWB2276E

IGNITION POWER SUPPLY — IGNITION SW. IN “ON” AND/OR “START”

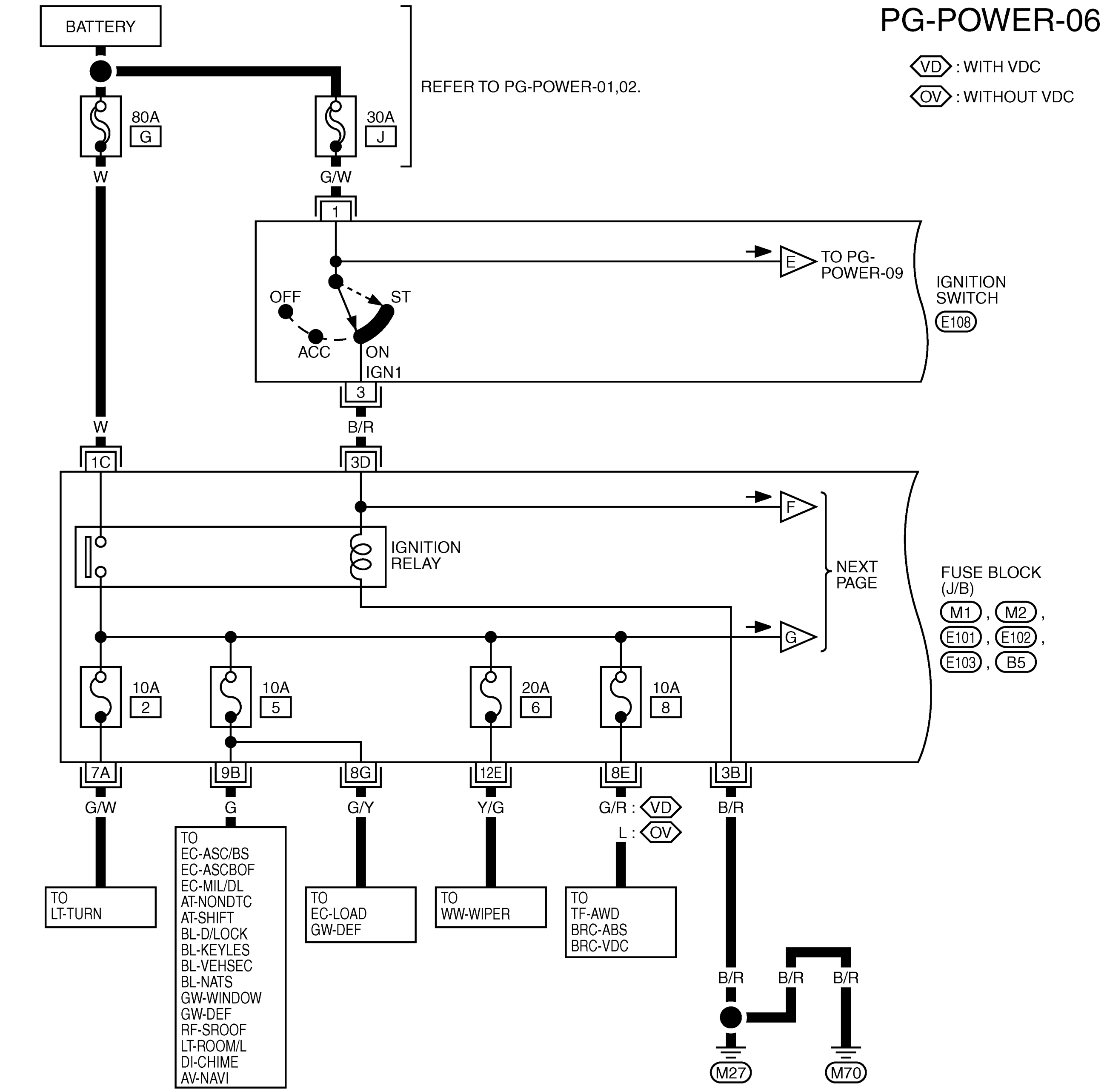

TKWB2277E

PG-POWER-07

A : WITH A/T

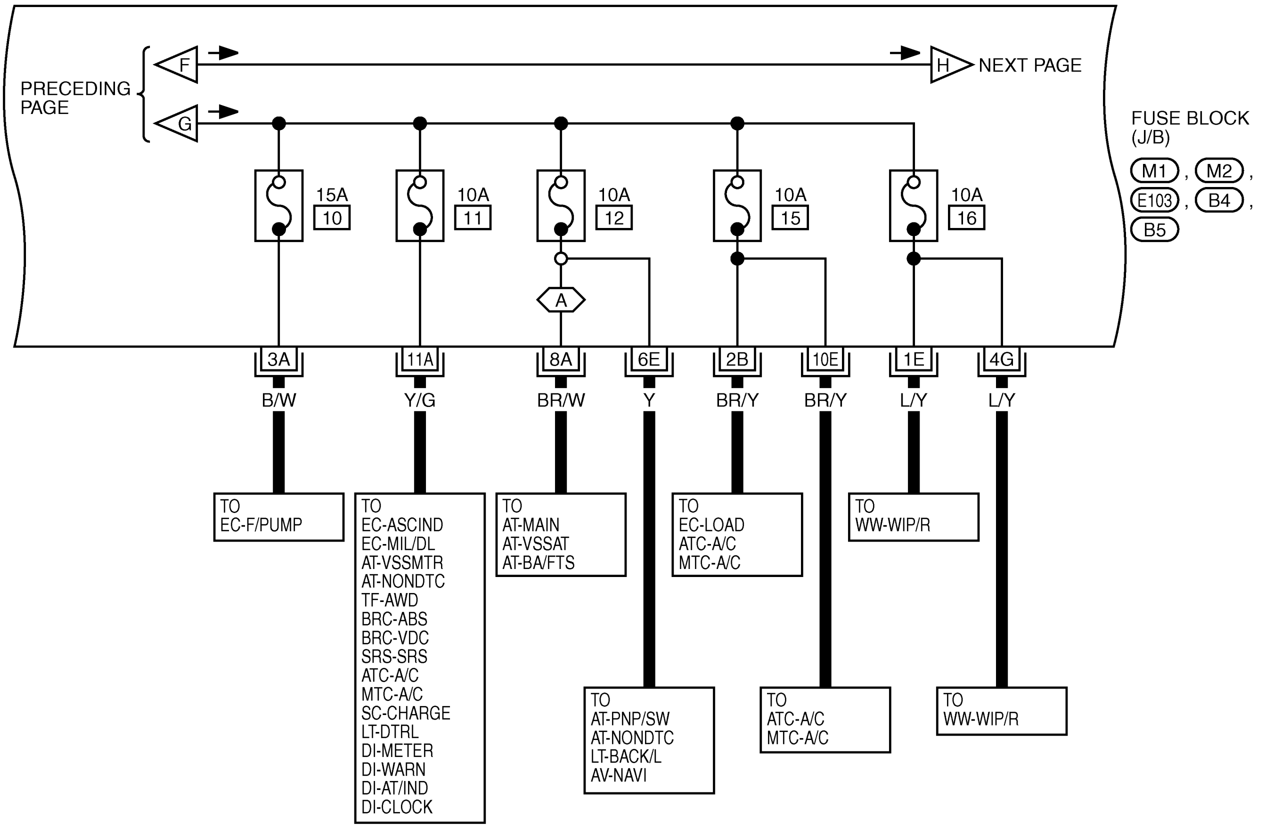

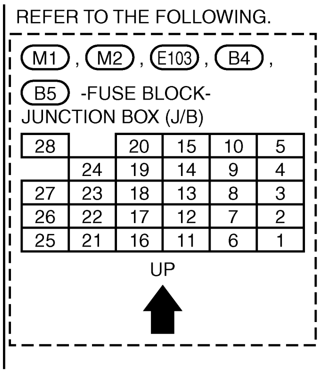

TKWB2278E

PG-POWER-08

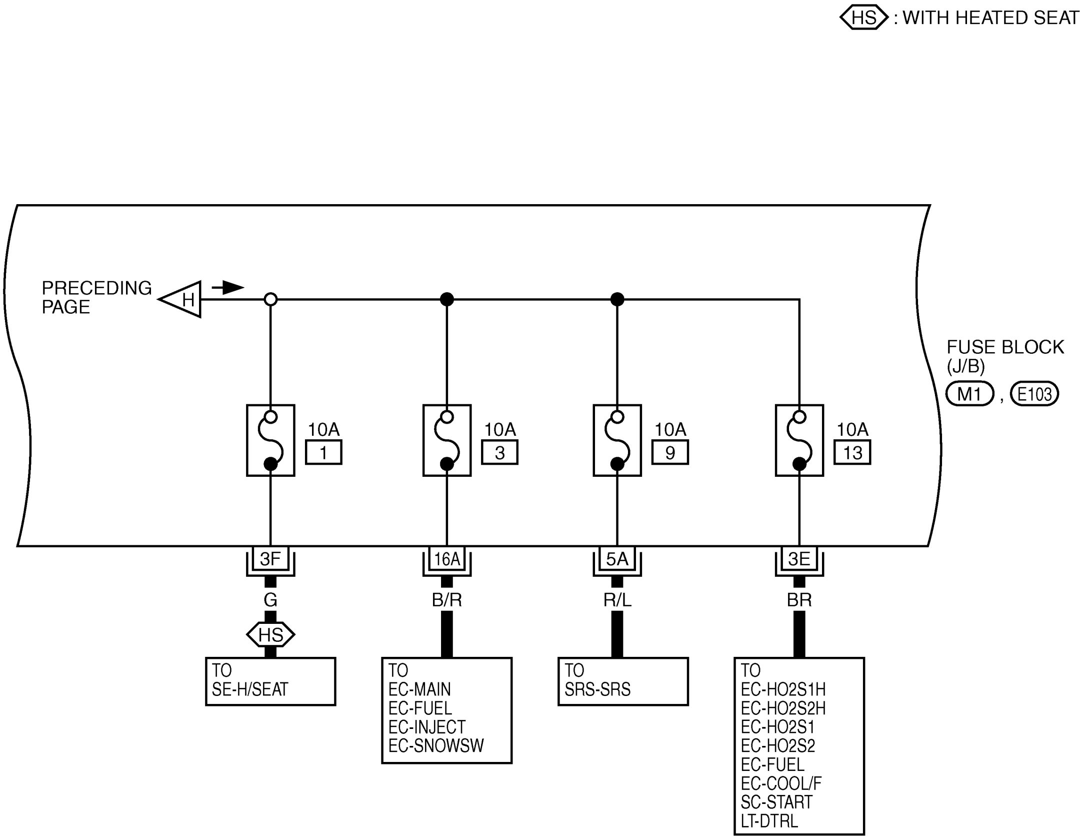

REFER TO THE FOLLOWING.

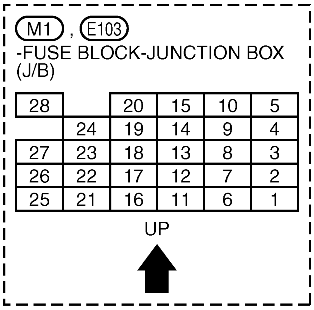

TKWB0210E

PG-POWER-09

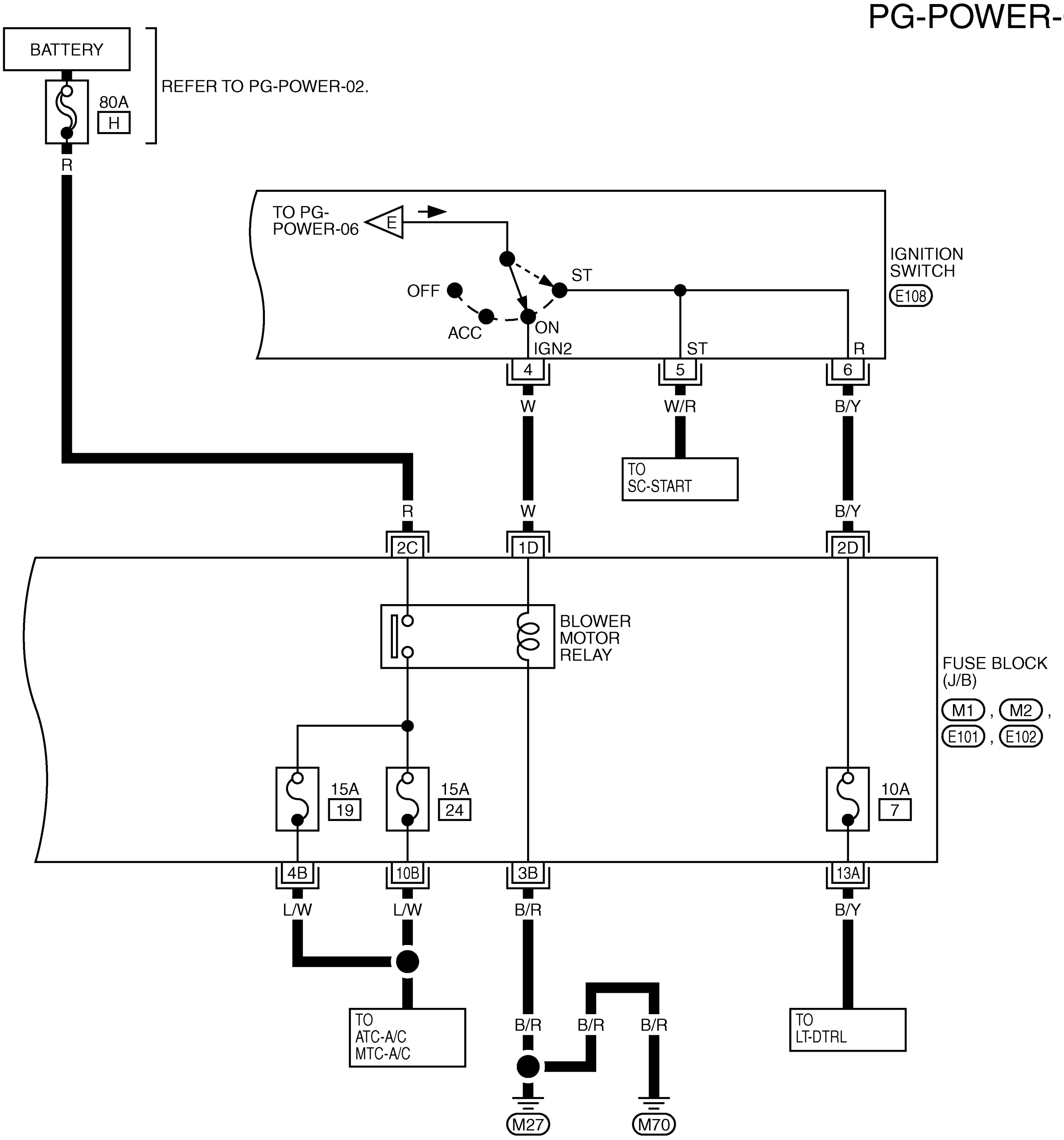

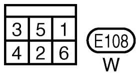

REFER TO THE FOLLOWING.

M1, M2, E101, E102 -FUSE BLOCK-JUNCTION BOX (J/B)

28		20	15	10	5
	24	19	14	9	4
27	23	18	13	8	3
26	22	17	12	7	2
25	21	16	11	6	1

UP

TKWB0211E

A B C D E F G H I J PG L M

Fuse

AKS00BET

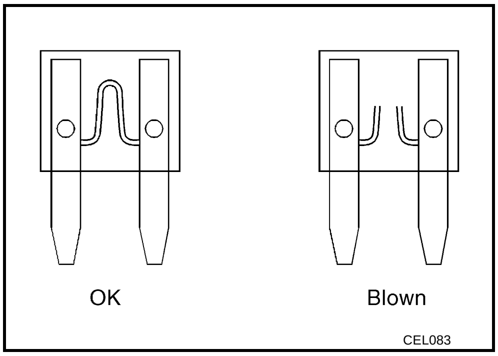

- If fuse is blown, be sure to eliminate cause of malfunction before installing new fuse.
- Use fuse of specified rating. Never use fuse of more than specified rating.
- Do not partially install fuse; always insert it into fuse holder properly.
- Remove fuse for “ELECTRICAL PARTS (BAT)” if vehicle is not used for a long period of time.

Fusible Link

AKS00BEU

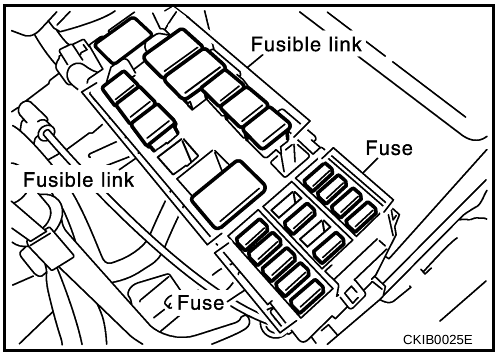

A melted fusible link can be detected either by visual inspection or by feeling with finger tip. If its condition is questionable, use circuit tester or test lamp.

CAUTION:

- **If fusible link should melt, it is possible that critical circuit (power supply or large current carrying circuit) is shorted. In such a case, carefully check and eliminate cause of malfunction.**
- **Never wrap outside of fusible link with vinyl tape. Important: Never let fusible link touch any other wiring harness, vinyl or rubber parts.**

Circuit Breaker

AKS00BEV

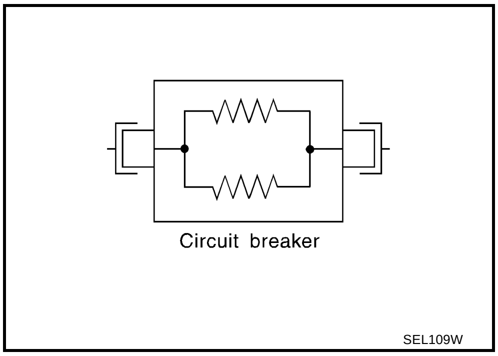

The PTC thermistor generates heat in response to current flow. The temperature (and resistance) of the thermistor element varies with current flow. Excessive current flow will cause the element's temperature to rise. When the temperature reaches a specified level, the electrical resistance will rise sharply to control the circuit current. Reduced current flow will cause the element to cool. Resistance falls accordingly and normal circuit current flow is allowed to resume.

GROUND

PFP:00011

Ground Distribution

AKS00BEW

MAIN HARNESS

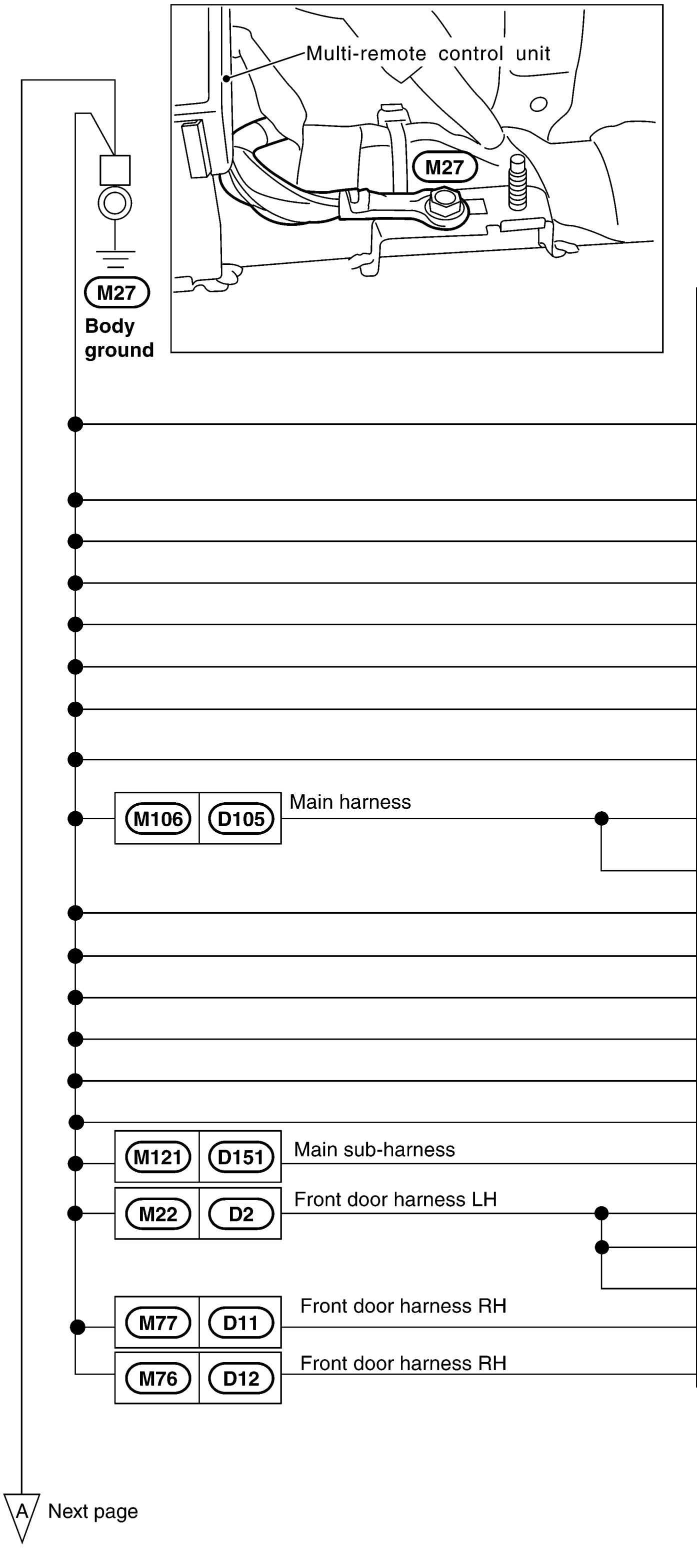

CON-NECTOR NUMBER	CONNECT TO
M2	Fuse block (J/B) (Terminal No.3B) · Accessory relay · Ignition relay · Blower motor relay
M3	Power window relay
M5	Data link connector (Terminal No.4)
M5	Data link connector (Terminal No.5)
M25	VDC offswitch (With VDC)
M32	Combination flasher unit
M39	AWD mode switch
M44	Combination meter (Terminal No.19) · High beam indicator
M54	Heater control panel (Terminal No.13) (With manual A/C)
M67	Fan control amp. (With auto A/C)
M59	Air bag diagnosis sensor unit (Terminal No.2)
M81	Steering angle sensor (With VDC)
M89	Illumination control swith
M107	AWD control unit (Terminal No.10)
M107	AWD control unit (Terminal No.11)
M122	Snow mode switch
M152	Clutch interlock swith (With M/T)
D3	Door mirror actuator (Driver side)
D6	Power window main switch
D8	Door key cylinder switch (Driver side)
D18	Door key cylinder switch (Passenger side)
D20	Door lock/unlock switch (Passenger side)

CKIB0026E

A Preceding page

CON-NECTOR NUMBER	CONNECT TO
M111	Transfer unit (Terminal No. 25) (With NAVI)
M111	Transfer unit (Terminal No. 27) (With NAVI)
M112	Display (Terminal No. 22) (With NAVI)
M112	Display (Terminal No. 24) (With NAVI)
M113	NAVI switch (With NAVI)
M116	NAVI control unit (Terminal No. 1) (With NAVI)
M116	NAVI control unit (Terminal No. 4) (With NAVI)
M116	NAVI control unit (Terminal No. 23) (With NAVI)

M70

Body ground

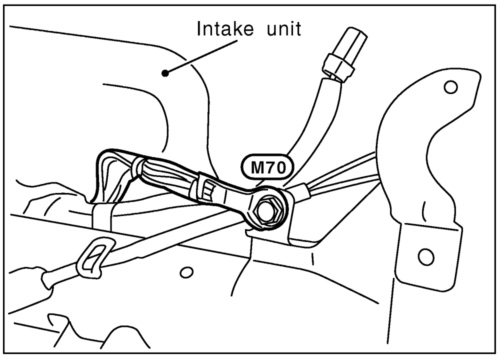

CON-NECTOR NUMBER	CONNECT TO
M26	Door mirror remote control switch
M35	Front power socket
M37	Mode door motor (With auto A/C)
M38	Air mix door motor (With auto A/C)
M44	Combination meter (Terminal No. 21) • CPU
M45	Combination meter (Terminal No. 46) • VDC off warning lamp • SLIP warning lamp
M45	Combination meter (Terminal No. 64) • Turn signal • Front fog

B Next page

CKIB0272E

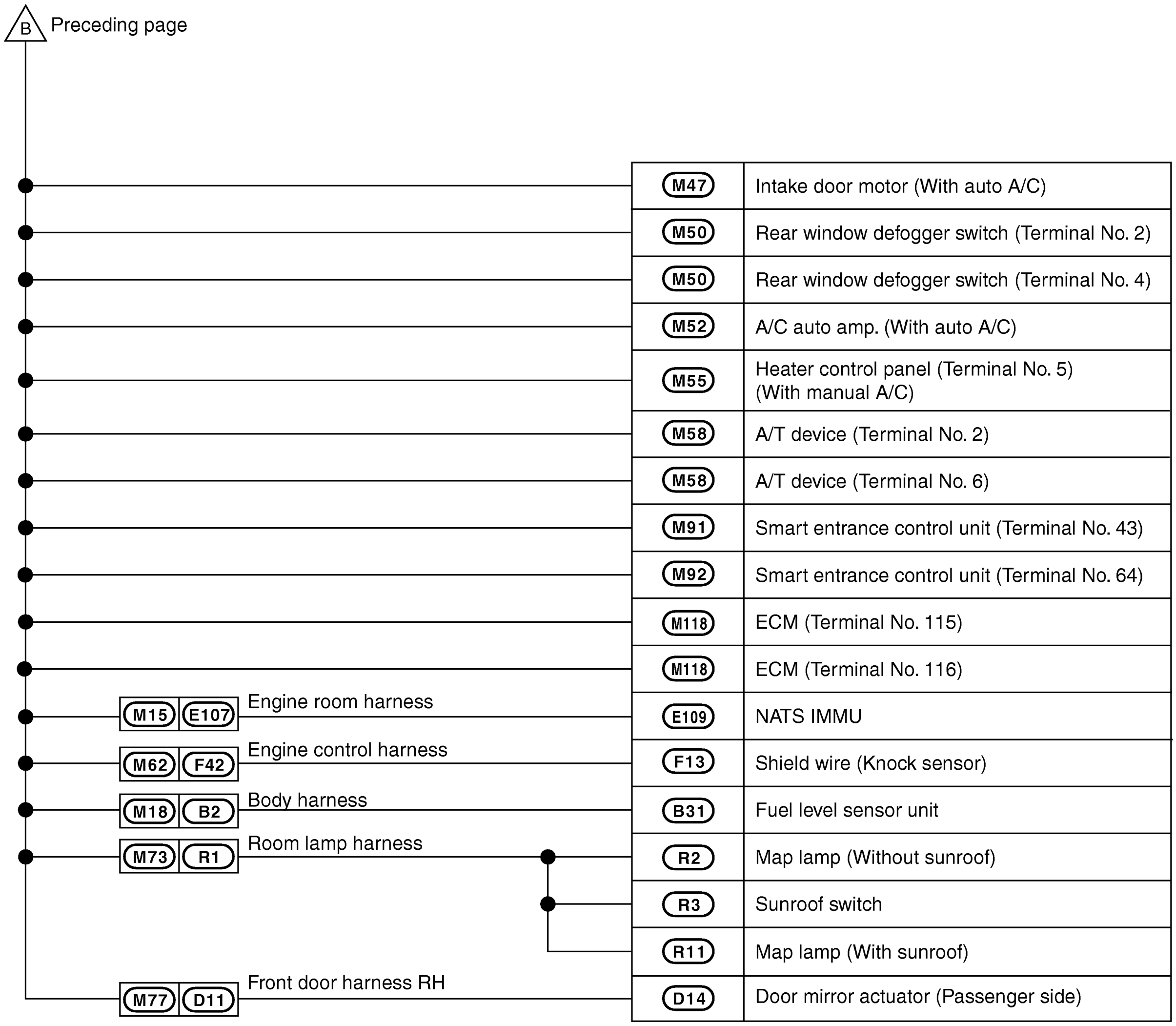
B Preceding page
M47 Intake door motor (With auto A/C)
M50 Rear window defogger switch (Terminal No. 2)
M50 Rear window defogger switch (Terminal No. 4)
M52 A/C auto amp. (With auto A/C)
M55 Heater control panel (Terminal No. 5) (With manual A/C)
M58 A/T device (Terminal No. 2)
M58 A/T device (Terminal No. 6)
M91 Smart entrance control unit (Terminal No. 43)
M92 Smart entrance control unit (Terminal No. 64)
M118 ECM (Terminal No. 115)
M118 ECM (Terminal No. 116)
M15 E107 Engine room harness
E109 NATS IMMU
M62 F42 Engine control harness
F13 Shield wire (Knock sensor)
M18 B2 Body harness
B31 Fuel level sensor unit
M73 R1 Room lamp harness
R2 Map lamp (Without sunroof)
R3 Sunroof switch
R11 Map lamp (With sunroof)
M77 D11 Front door harness RH
D14 Door mirror actuator (Passenger side)

CKIB0273E

ENGINE ROOM HARNESS

E24

Body ground

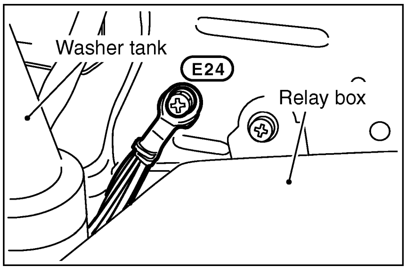

CON-NECTOR NUMBER	CONNECT TO
E7	Front fog lamp relay
E11	Cooling fan relay-3
E13	Daytime light relay LH
E16	Daytime light relay RH
E43	Parking lamp LH
E45	Front fog lamp LH
E83	Front side markerlamp LH
E129	Driving lamp relay-2 (Terminal No. 2)
E129	Driving lamp relay-2 (Terminal No. 6)

CON-NECTOR NUMBER	CONNECT TO
E19	Brake fluid level switch
E20	Side turn signal lamp RH
E25	Front turn signal lamp RH
E47	Front turn signal lamp LH
E48	Side turn signal lamp LH

E50

Body ground

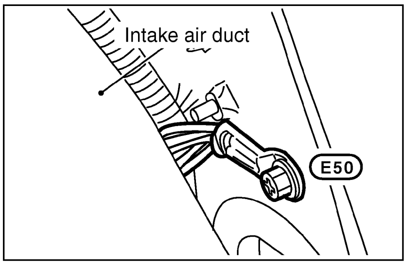

CON-NECTOR NUMBER	CONNECT TO
E18	Front wiper motor
E26	Headlamp RH
E27	Front fog lamp RH
E29	Parking lamp RH
E41	Cooling fan motor-1
E42	Cooling fan motor-2
E54	Hood switch
E81	Washer level sensor
E82	Front side makerlamp RH
E112	Combination switch (Terminal No. 17) (Front wiper and washer switch)
E112	Combination switch (Terminal No. 24) (Rear wiper and washer switch)
E115	Daytime light control unit

CKIB0274E

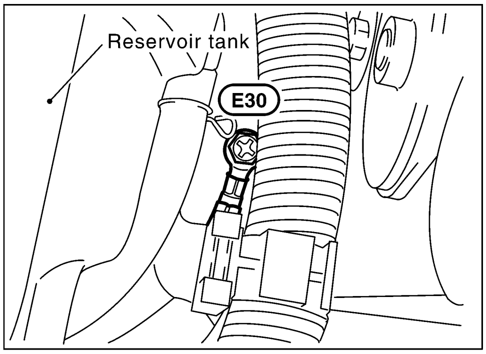

E30 Body ground

CON-NECTOR NUMBER	CONNECT TO
E33	Alternator (E)

E58 Body ground

CON-NECTOR NUMBER	CONNECT TO
E69	ABS actuator and electric unit (Control unit) (Without VDC) (Terminal No. 16)
E69	ABS actuator and electric unit (Control unit) (Without VDC) (Terminal No. 30)
E122	VDC/TCS/ABS control unit (With VDC) (Terminal No. 28)
E122	VDC/TCS/ABS control unit (With VDC) (Terminal No. 29)

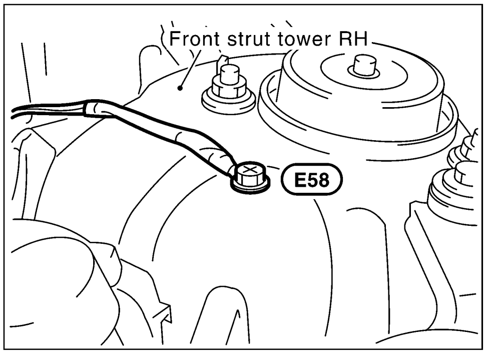

CKIB0029E

ENGINE CONTROL HARNESS

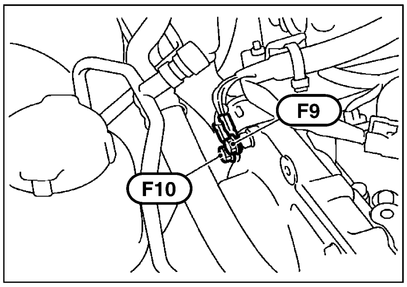

F9 Engine ground

CON-NECTOR NUMBER	CONNECT TO
F16	Shield wire [Electric throttle control actuator (Throttle position sensor)] (For circuit from terminal No.1)
F16	Shield wire [Electric throttle control actuator (Throttle position sensor)] (For circuit from terminal No.2, 4, 5)
F16	Shield wire [Electric throttle control actuator (Throttle control motor)] (For circuit from terminal No.3, 6)
F47	TCM (Transmission control module) (Terminal No.25)
F47	TCM (Transmission control module) (Terminal No.48)

CON-NECTOR NUMBER	CONNECT TO
F24	Park/Neutral position switch (With A/T)
F26	Park/Neutral position switch (With M/T)

F10 Engine ground

CON-NECTOR NUMBER	CONNECT TO
F4	Ignition coil No.1 (With power transistor)
F5	Ignition coil No.2 (With power transistor)
F6	Ignition coil No.3 (With power transistor)
F7	Ignition coil No.4 (With power transistor)
F8	Condenser

CON-NECTOR NUMBER	CONNECT TO
F43	ECM (Terminal No.1)
F14	Crankshaft position sensor (POS)
F20	Camshaft position sensor (PHASE)

F49 Engine ground

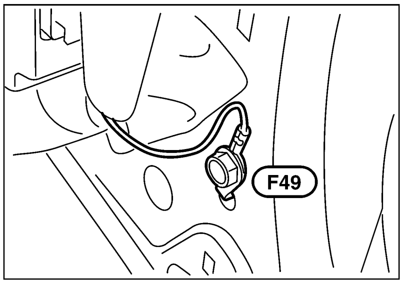

CKIB0030E

BODY HARNESS

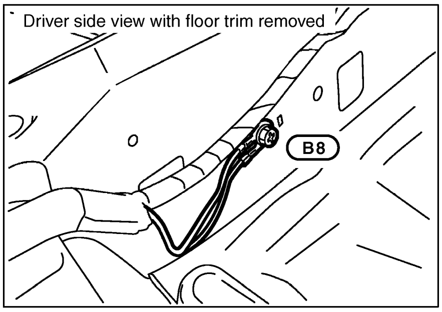

B8 Body ground

CONNECTOR NUMBER	CONNECT TO
B10	Seat belt buckle switch (Driver side) (Without power seat)
B11	Heated seat LH (Without power seat)
B16	Front door switch (Driver side)
B23	Rear power socket
B31	Fuel pump
B33	Condenser
B302	Seat belt buckle switch (Driver side) (With power seat)
B303	Heated seat LH (With power seat)
B308	Power seat switch (Driver side) (With power seat)

B41 B301 Front power seat (Driver side) sub-harness*

B41 B301 Front power seat (Driver side) sub-harness*

*: This sub-harness is not shown in "HARNESS LAYOUT".

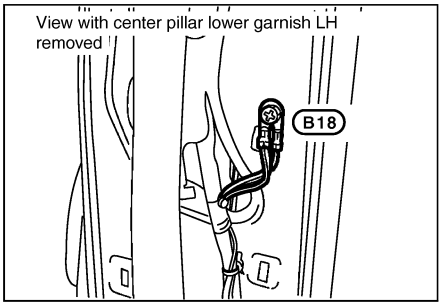

B18 Body ground

CONNECTOR NUMBER	CONNECT TO
B14	Shield wire [Air bag]diagnosis sensor unit (Terminal No. 44)]
B24	Rear combination lamp RH • Stop lamp • Tail lamp • Turn signal • Back-up
B28	Rear combination lamp LH • Stop lamp • Tail lamp • Turn signal • Back-up
B42	Rearside markerlamp RH
B43	Rearside markerlamp LH

CKIB0275E

BODY NO. 2 HARNESS

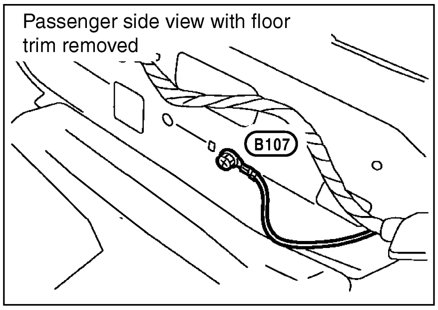

B107
Body ground

B131 B211 Heated seat switch sub-harness*

CON-NECTOR NUMBER	CONNECT TO
B110	Heated seat RH (Without power seat)
B212	Heated seat switch LH
B213	Heated seat switch RH

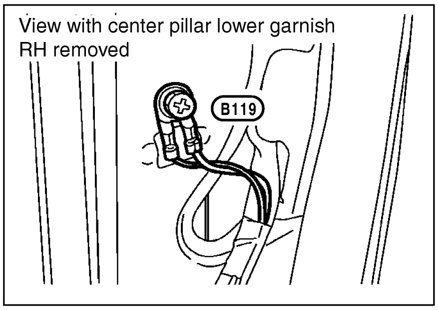

B119
Body ground

CON-NECTOR NUMBER	CONNECT TO
B115	Shield wire [Air bag diagnosis sensor unit (Terminal No. 40)]

* : This sub-harness is not shown in "HARNESS LAYOUT".

CKIB0276E

ROOM LAMP HARNESS

CONNECTOR NUMBER	CONNECT TO
R9	Driving lamp LH
R10	Driving lamp RH (Terminal No. 1)
R10	Driving lamp RH (Terminal No. 3)

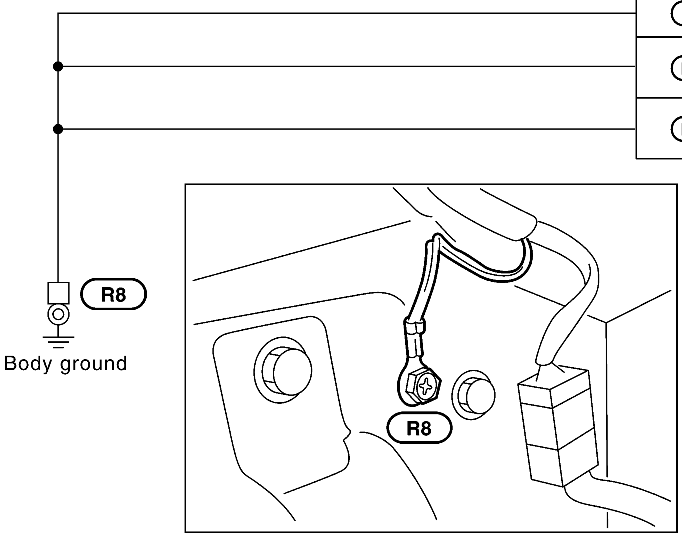

CKIA0375E

BACK DOOR SUB HARNESS/REAR WINDOW DEFOGGER HARNESS

BACK DOOR SUB-HARNESS

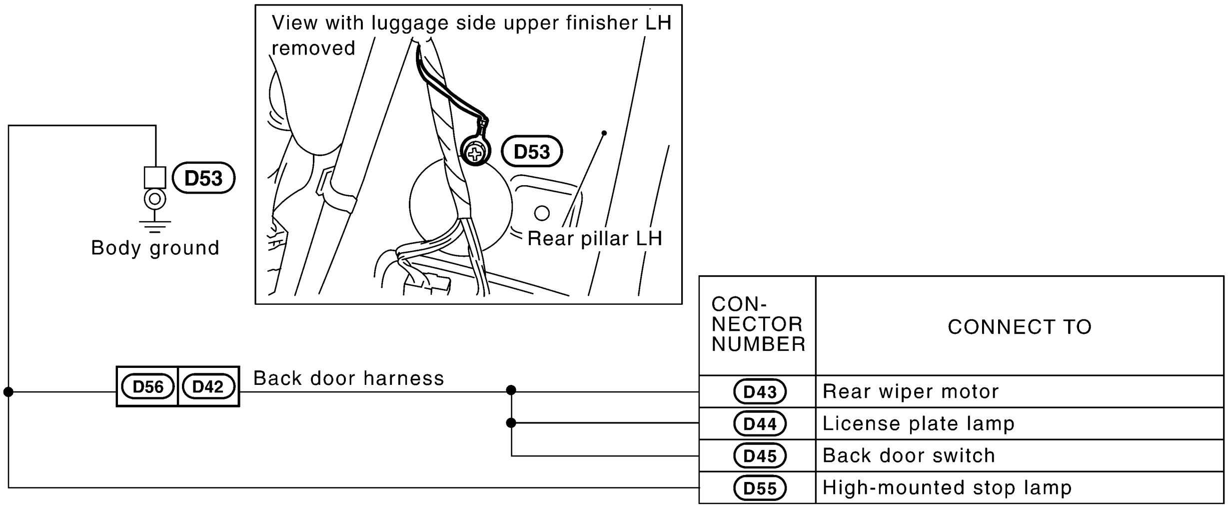

CONNECTOR NUMBER	CONNECT TO
D43	Rear wiper motor
D44	License plate lamp
D45	Back door switch
D55	High-mounted stop lamp

REAR WINDOW DEFOGGER HARNESS

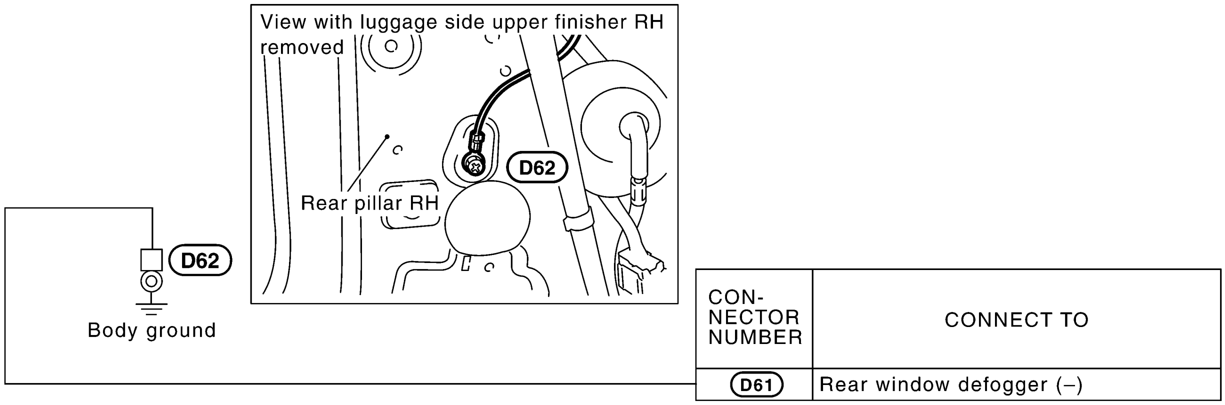

CONNECTOR NUMBER	CONNECT TO
D61	Rear window defogger (–)

CKIA0376E

HARNESS

PFP:00011

Harness Layout

AKS00BEX

HOW TO READ HARNESS LAYOUTS

The following Harness Layouts use a map style grid to help locate connectors on the figures:

- Main Harness
- Engine Room Harness (Engine Compartment)

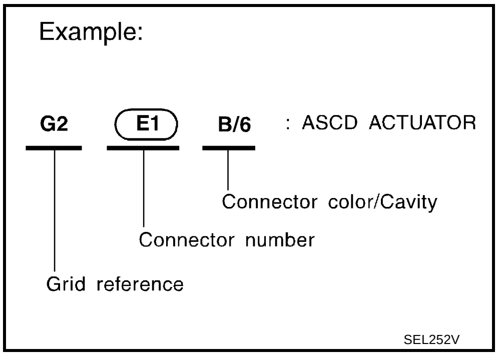

SEL252V

To Use the Grid Reference

1. Find the desired connector number on the connector list.
2. Find the grid reference.
3. On the figure, find the crossing of the grid reference letter column and number row.
4. Find the connector number in the crossing zone.
5. Follow the line (if used) to the connector.

CONNECTOR SYMBOL

Main symbols of connector (in Harness Layout) are indicated in the below.

Connector type	Water proof type		Standard type	
	Male	Female	Male	Female
• Cavity: Less than 4 • Relay connector				
• Cavity: From 5 to 8				
• Cavity: More than 9	—	—	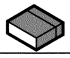	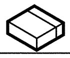
• Ground terminal etc.	—			

SKIA0404E

OUTLINE

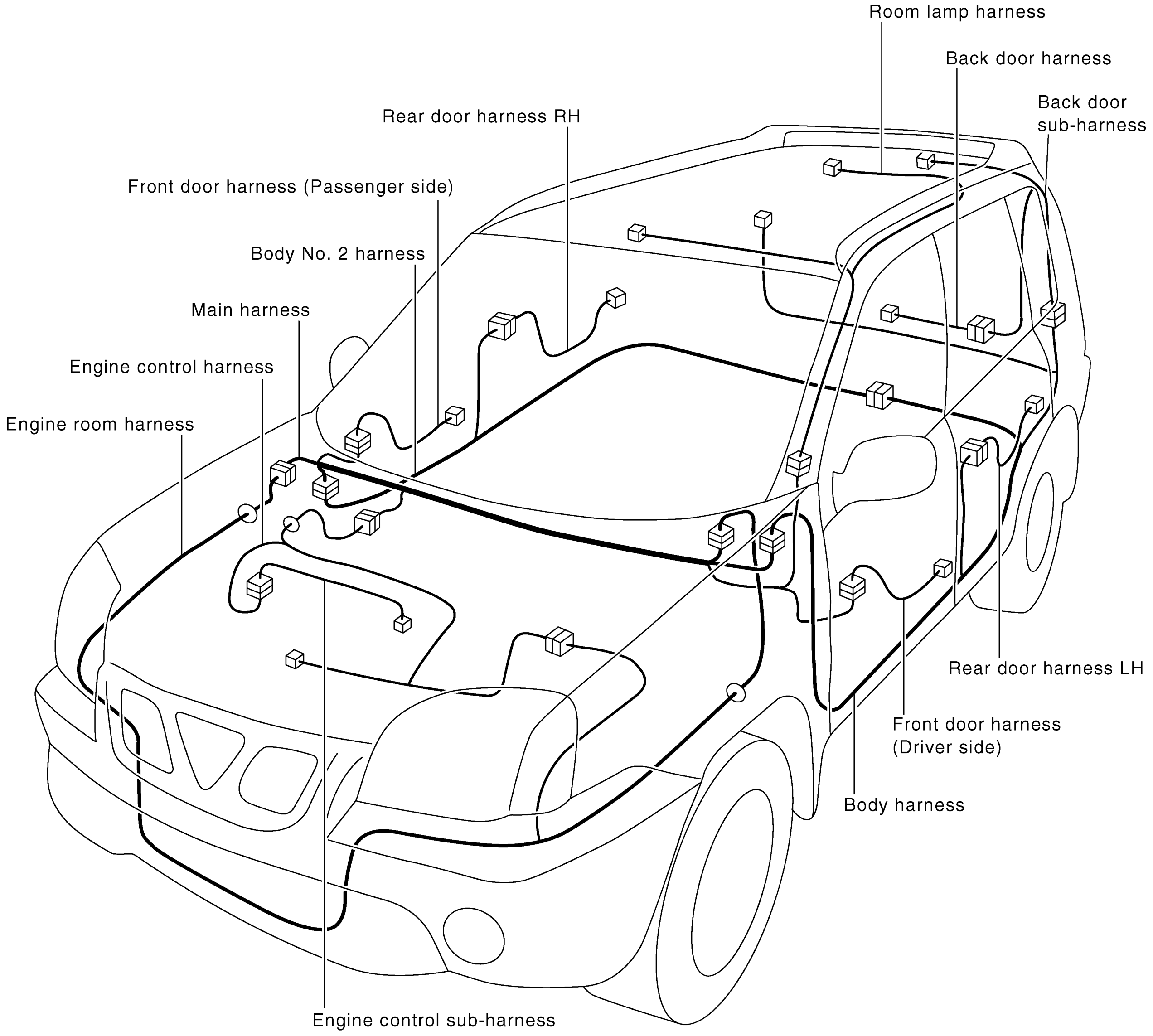

TKIA0131E

MAIN HARNESS

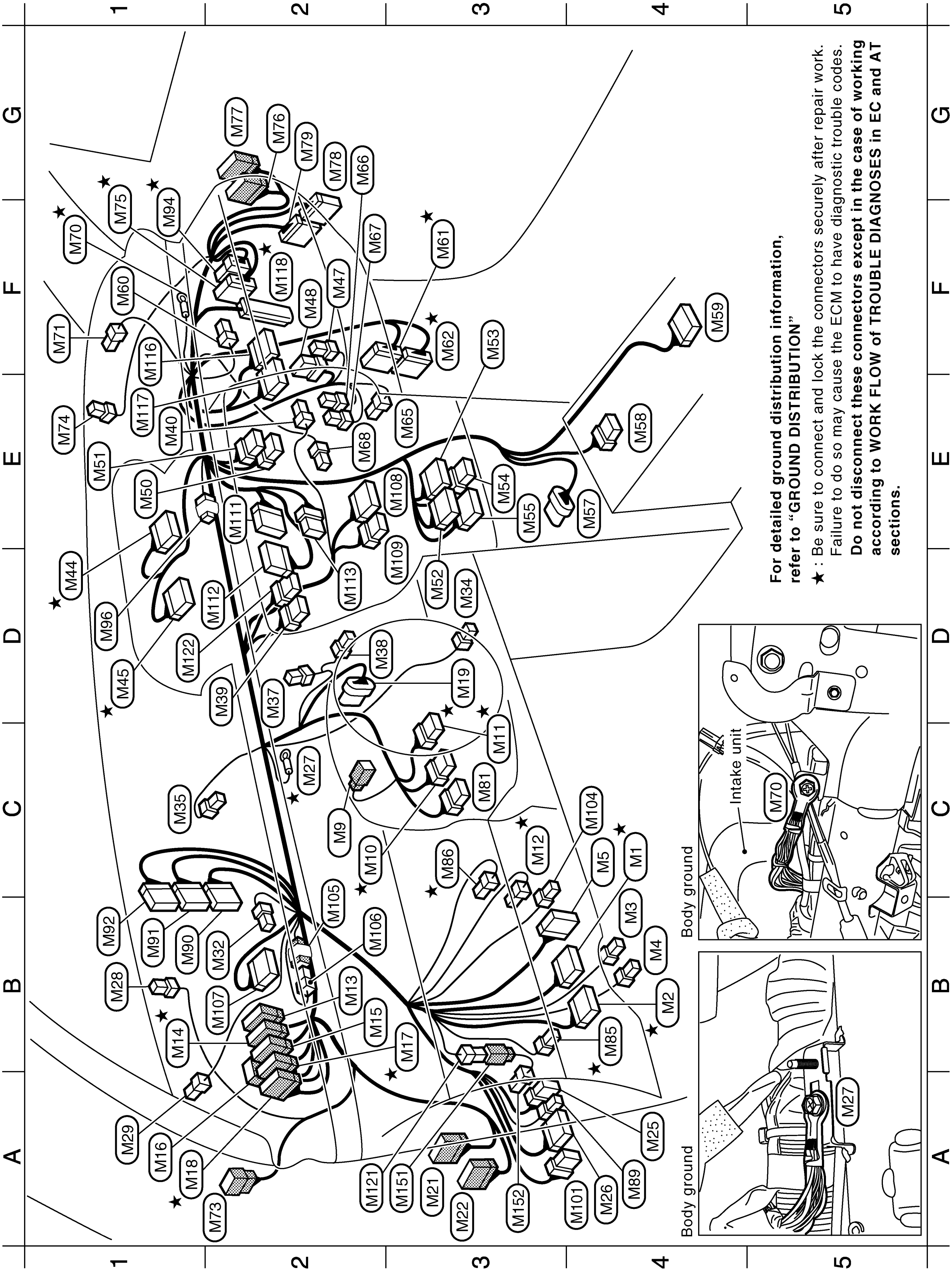

TKIB0547E

C4	★	M1	W/16	: Fuse block (J/B)
B4	★	M2	W/10	: Fuse block (J/B)
B4		M3	L/4	: Power window relay
B4		M4	W/2	: Circuit breaker (PTC)
C4		M5	W/16	: Data link connector
C2		M9	BR/2	: Key switch
C2	★	M10	Y/6	: Combination switch (Spiral cable)
C3	★	M11	GY/8	: Combination switch (Spiral cable)
C3	★	M12	W/4	: Stop lamp switch (With A/T)
			B/2	: Stop lamp switch (With M/T)
B2		M13	W/12	: To E105
B1	★	M14	BR/16	: To E106
B2		M15	W/16	: To E107
A1		M16	W/6	: To B3
B3	★	M17	W/10	: To B1
A1	★	M18	BR/20	: To B2
D3	★	M19	GY/6	: Accelerator pedal position sensor
A3		M21	W/16	: To D1
A3		M22	BR/12	: To D2
A4		M25	GY/6	: VDC off switch (With VDC)
A4		M26	W/10	: Door mirror remote control switch
C2	★	M27	–	: Body ground
B1		M28	BR/2	: Security indicator lamp
A1		M29	BR/2	: Tweeter LH
B2		M32	B/3	: Combination flasher unit
D3		M34	W/2	: In-vehicle sensor (With auto A/C)
C1		M35	B/2	: Front power socket
D2		M37	W/3	: Mode door motor (With auto A/C)
D2		M38	W/3	: Air mix door motor (With auto A/C)
D2		M39	GY/8	: AWD mode switch (AWD models)
E1		M40	W/2	: Roof antenna (Via sub-harness)
D1	★	M44	W/40	: Combination meter
D1	★	M45	W/24	: Combination meter
F2		M47	W/3	: Intake door motor (With auto A/C)
F2		M48	B/6	: Intake door motor (With manual A/C)
E1		M50	W/6	: Rear window defogger switch (With manual A/C)
E1		M51	W/8	: Hazard switch
D3		M52	GY/20	: A/C auto amp. (With auto A/C)
F3		M53	GY/16	: A/C auto amp. (With auto A/C)
E3		M54	W/6	: Fan switch (With manual A/C)
E3		M55	W/12	: Heater control panel (With manual A/C)
E4		M57	W/5	: G sensor (AWD models) (Without VDC)
E4		M58	W/6	: A/T device (With A/T)
F4		M59	Y/20	: Air bag diagnosis sensor unit
F1		M60	Y/2	: Front passenger air bag module
F3	★	M61	BR/24	: To F41
F3	★	M62	W/16	: To F42
E3		M65	W/2	: Blower motor
G2		M66	BR/4	: Fan resistor (With manual A/C)
F2		M67	W/4	: Fan control amp. (With auto A/C)
E2		M68	W/4	: Intake sensor (With auto A/C)
F1	★	M70	–	: Body ground
F1		M71	BR/2	: Tweeter RH
A2		M73	W/8	: To R1
E1		M74	B/2	: Sunload sensor (With auto A/C)
F1	★	M75	BR/20	: To E116 (AWD models)
G2		M76	BR/12	: To D12
G2		M77	W/12	: To D11
G2		M78	W/12	: To B105
G2		M79	W/10	: To B106
C3		M81	W/8	: Steering angle sensor (With VDC)
B4	★	M85	L/2	: ASCD clutch switch (With M/T)
C3	★	M86	BR/2	: ASCD brake switch
A4		M89	W/3	: Illumination control switch
B1		M90	W/24	: Smart entrance control unit
B1		M91	GY/24	: Smart entrance control unit
B1		M92	GY/16	: Smart entrance control unit
F1	★	M94	W/8	: To E125 (2WD models)
D1		M96	L/4	: Diode
A4		M101	W/8	: Driving lamp switch
C4		M104	W/8	: Voice change relay
B2		M105	B/2	: To M106
B2		M106	B/2	: To M105
B2		M107	W/16	: AWD control unit (AWD models)
E3		M108	W/10	: Audio unit
D3		M109	W/6	: Audio unit
E2		M111	W/32	: Transfer unit (With NAVI)
D2		M112	GY/24	: Display (With NAVI)
D2		M113	W/8	: NAVI switch (With NAVI)
F1		M116	W/24	: NAVI control unit (With NAVI)
E1		M117	GY/24	: NAVI control unit (With NAVI)
F2	★	M118	SMJ	: ECM
A2		M121	W/2	: To M151 (With M/T)
D1		M122	BR/6	: Snow mode switch (2WD models)

Main sub-harness

A3	M151	W/2	: To M121 (With M/T)
A3	M152	L/2	: Clutch inter lock switch (With M/T)

Diode M96

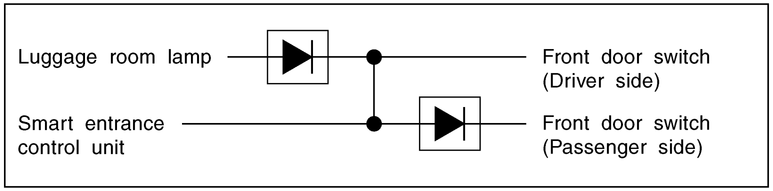

★ : Be sure to connect and lock the connectors securely after repair work. Failure to do so may cause the ECM to have diagnostic trouble codes. **Do not disconnect these connectors except in the case of working according to WORK FLOW of TROUBLE DIAGNOSES in EC and AT sections.**

TKIB0548E

ENGINE ROOM HARNESS

Engine Compartment for 2WD Models

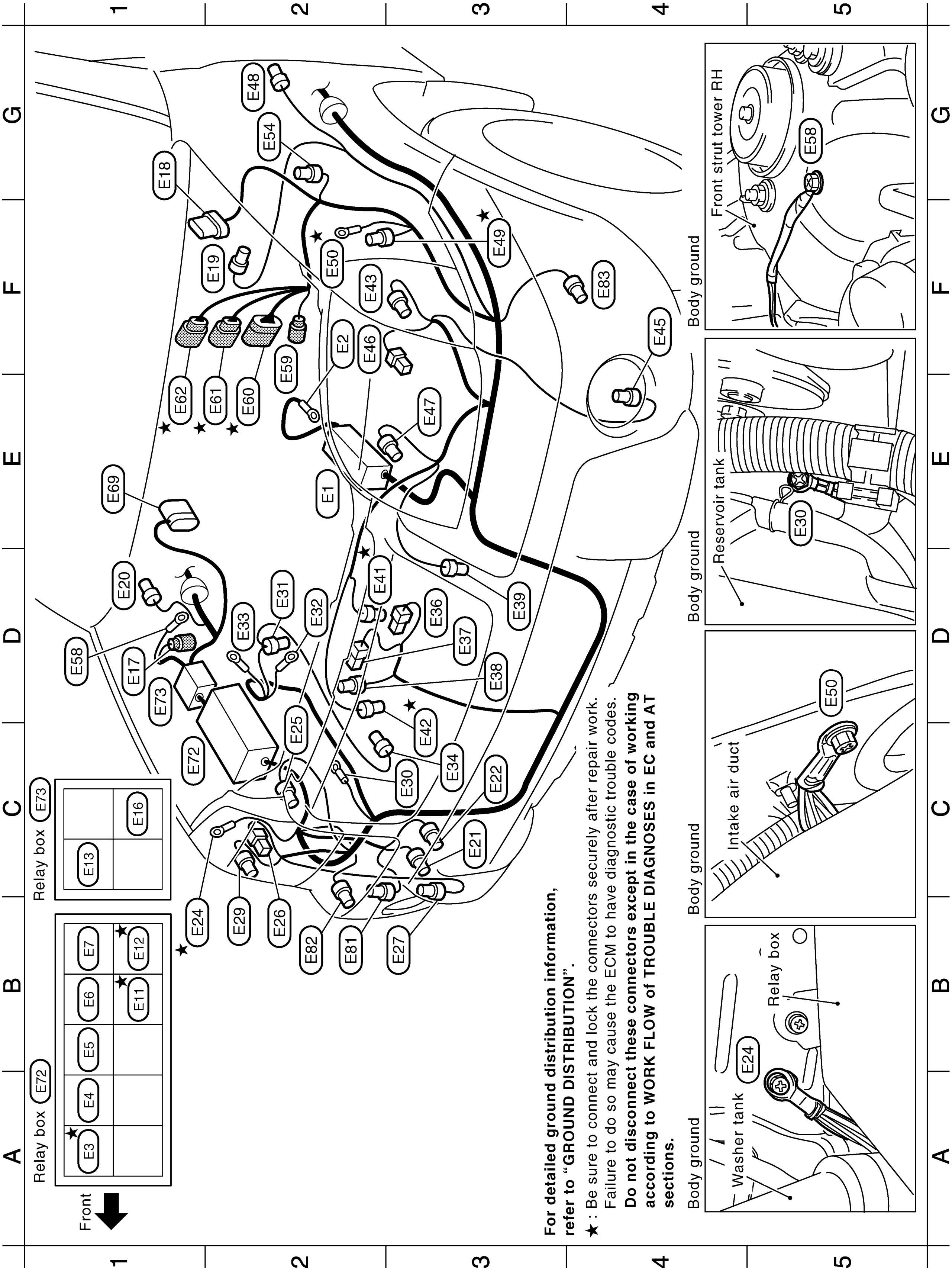

E2		E1	–	Fuse and Fusible link box
F2		E2	–	Battery (+)
A1	★	E3	BR/6	Cooling fan relay-1
A1		E4	W/3	Horn relay
B1		E5	L/4	Air conditioner relay
B1		E6	L/4	Park/Neutral position relay
B1		E7	L/4	Front fog lamp relay
B1	★	E11	BR/6	Cooling fan relay-3
B1	★	E12	L/4	Throttle control motor relay
C1		E13	L/4	Daytime light relay LH
C1		E16	L/4	Daytime light relay RH
D1		E17	GY/2	Front wheel sensor RH
G1		E18	GY/5	Front wiper motor
F2		E19	GY/2	Brake fluid level switch
D1		E20	BR/2	Side turn signal lamp RH
C3		E21	GY/2	Front washer motor
C3		E22	BR/2	Rear washer motor
B1	★	E24	–	Body ground
C2		E25	GY/2	Front turn signal lamp RH
B2		E26	B/3	Headlamp RH
B3		E27	–/2	Front fog lamp RH
B2		E29	GY/3	Parking lamp RH
C3		E30	–	Body ground
D2		E31	GY/2	Alternator
D2		E32	–	Alternator
D2		E33	–	Alternator
C3		E34	B/1	Compressor
D3		E36	B/1	Horn high
D3		E37	B/1	Horn low
D3		E38	B/2	Ambient sensor
D3		E39	B/3	Refrigerant pressure sensor
D2	★	E41	GY/2	Cooling fan motor-1
C3	★	E42	GY/4	Cooling fan motor-2
F2		E43	GY/3	Parking lamp LH
F4		E45	–/2	Front fog lamp LH
F2		E46	B/3	Headlamp LH
E3		E47	GY/2	Front turn signal lamp LH
G2		E48	BR/2	Side turn signal lamp LH
F3	★	E49	GY/2	Dropping resistor
F2	★	E50	–	Body ground
G2		E54	GY/2	Hood switch
D1		E58	–	Body ground
F2		E59	L/2	Front wheel sensor LH
E2	★	E60	GY/9	To F36
E2	★	E61	DGY/8	To F38
E1	★	E62	GY/8	To F37
E1		E69	SMJ	ABS actuator and electric unit
A1, C1		E72	–	Relay box
C1, D1		E73	–	Relay box
B2		E81	BR/2	Washer level sensor
B2		E82	GY/2	Front side marker lamp RH
F4		E83	GY/2	Front side marker lamp LH

★: Be sure to connect and lock the connectors securely after repair work. Failure to do so may cause the ECM to have diagnostic trouble codes. **Do not disconnect these connectors except in the case of working according to WORK FLOW of TROUBLE DIAGNOSES in EC and AT sections.**

TKIB0046E

Engine Compartment for AWD Models

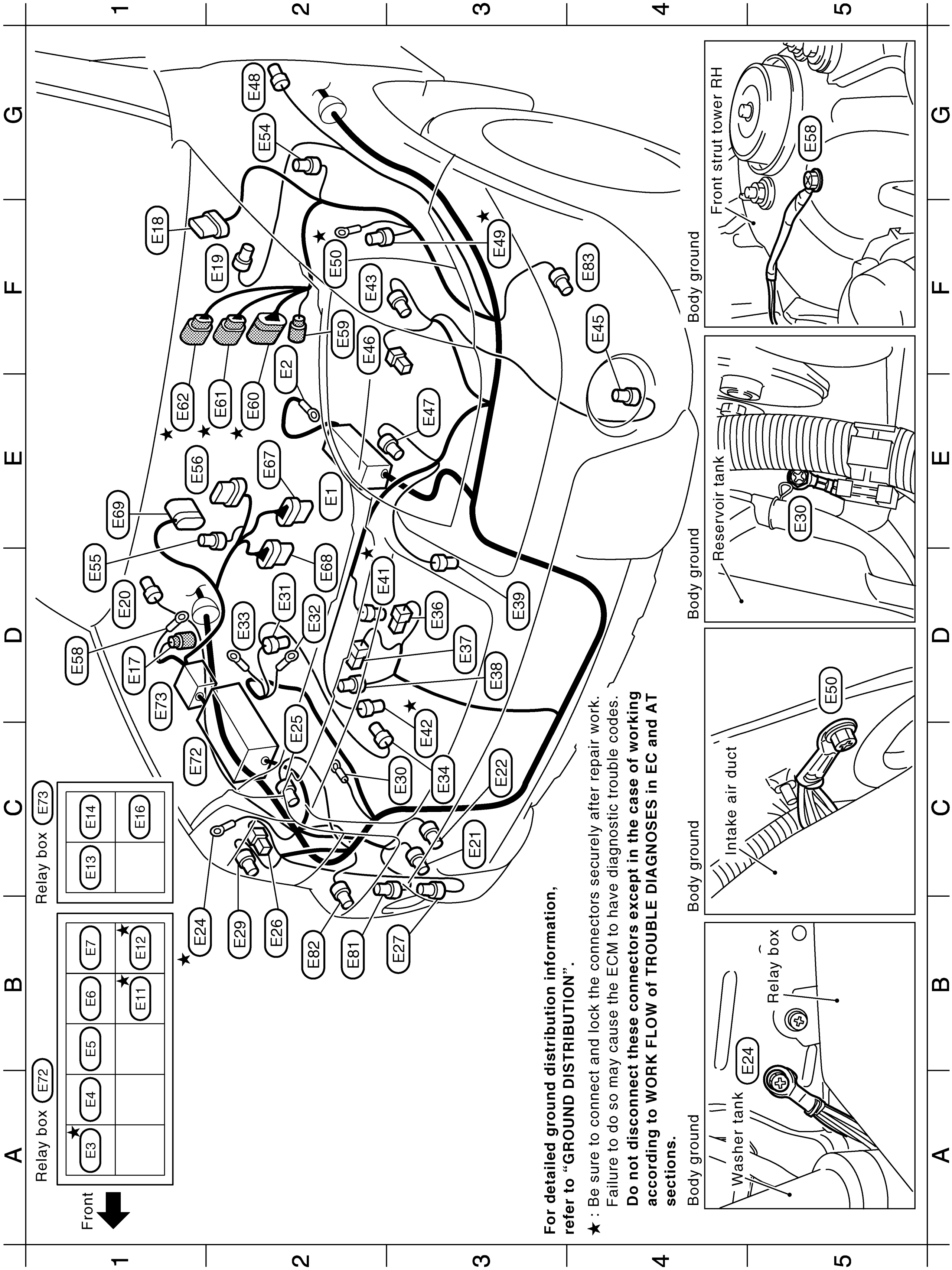

For detailed ground distribution information, refer to "GROUND DISTRIBUTION".

★ : Be sure to connect and lock the connectors securely after repair work. Failure to do so may cause the ECM to have diagnostic trouble codes. **Do not disconnect these connectors except in the case of working according to WORK FLOW of TROUBLE DIAGNOSES in EC and AT sections.**

TKIB0550E

Grid		Connector	Wire color/No. of pins	Description
E2		E1	—	Fuse and Fusible link box
F2		E2	—	Battery (+)
A1	★	E3	BR/6	Cooling fan relay-1
A1		E4	W/3	Horn relay
B1		E5	L/4	Air conditioner relay
B1		E6	L/4	Park/Neutral position relay
B1		E7	L/4	Front fog lamp relay
B1	★	E11	BR/6	Cooling fan relay-3
B1	★	E12	L/4	Throttle control motor relay
C1		E13	L/4	Daytime light relay LH
C1		E14	L/4	Driving lamp relay-1
C1		E16	L/4	Daytime light relay RH
D1		E17	GY/2	Front wheel sensor RH
F1		E18	GY/5	Front wiper motor
F2		E19	GY/2	Brake fluid level switch
D1		E20	BR/2	Side turn signal lamp RH
C3		E21	GY/2	Front washer motor
C3		E22	BR/2	Rear washer motor
B1	★	E24	—	Body ground
C2		E25	GY/2	Front turn signal lamp RH
B2		E26	B/3	Headlamp RH
B3		E27	–/2	Front fog lamp RH
B2		E29	GY/3	Parking lamp RH
C3		E30	—	Body ground
D2		E31	GY/2	Alternator
D2		E32	—	Alternator
D2		E33	—	Alternator
C3		E34	B/1	Compressor
D3		E36	B/1	Horn high
D3		E37	B/1	Horn low
D3		E38	B/2	Ambient sensor
D3		E39	B/3	Refrigerant pressure sensor
D2	★	E41	GY/2	Cooling fan motor-1
C3	★	E42	GY/4	Cooling fan motor-2
F2		E43	GY/3	Parking lamp LH
F4		E45	–/2	Front fog lamp LH
F2		E46	B/3	Headlamp LH
E3		E47	GY/2	Front turn signal lamp LH
G2		E48	BR/2	Side turn signal lamp LH
F3	★	E49	GY/2	Dropping resistor (With A/T)
F2	★	E50	—	Body ground
G2		E54	GY/2	Hood switch
D1		E55	B/2	VDC relay box (With VDC)
E1		E56	B/8	VDC relay box (With VDC)
D1		E58	—	Body ground
F2		E59	L/2	Front wheel sensor LH
E2	★	E60	GY/9	To F36
E2	★	E61	DGY/8	To F38
E1	★	E62	GY/8	To F37 (With A/T)
E2		E67	DGY/8	VDC actuator (With VDC)
D2		E68	SB/8	VDC actuator (With VDC)
E1		E69	SMJ	ABS actuator and electric unit (Without VDC)
A1, C1		E72	—	Relay box
C1, D1		E73	—	Relay box
B2		E81	BR/2	Washer level sensor
B2		E82	GY/2	Front side marker lamp RH
F4		E83	GY/2	Front side marker lamp LH

★ : Be sure to connect and lock the connectors securely after repair work. Failure to do so may cause the ECM to have diagnostic trouble codes. **Do not disconnect these connectors except in the case of working according to WORK FLOW of TROUBLE DIAGNOSES in EC and AT sections.**

TKIB0551E

Passenger Compartment

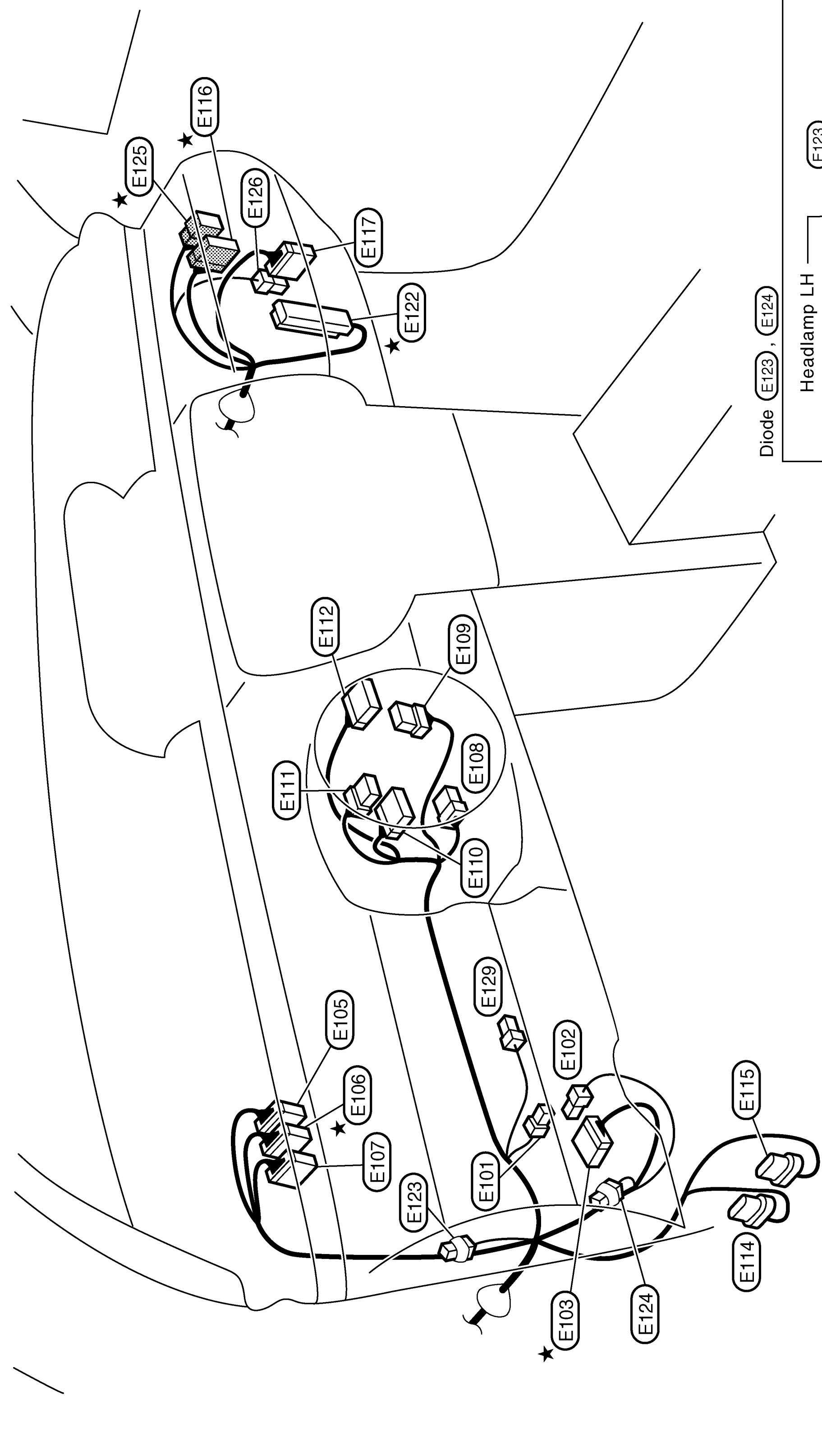

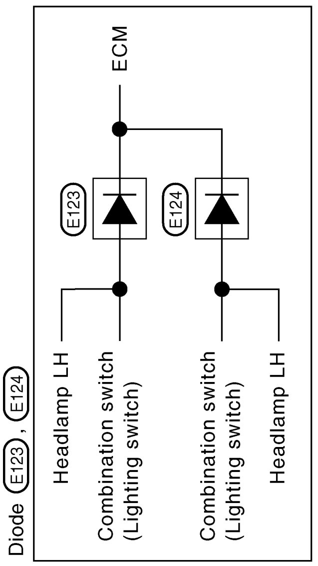

★	E101	B/2	: Fuse block (J/B)
	E102	W/4	: Fuse block (J/B)
★	E103	W/12	: Fuse block (J/B)
	E105	W/12	: To M13
★	E106	BR/16	: To M14
	E107	W/16	: To M15
	E108	W/6	: Ignition switch
	E109	W/8	: NATS IMMU
	E110	BR/12	: Combination switch (Lighting switch)
	E111	W/8	: Combination switch (Fog lamp switch)
	E112	GY/12	: Combination switch (Wiper and washer switch)

	E114	GY/6	: Daytime light control unit
	E115	GY/8	: Daytime light control unit
★	E116	BR/20	: To M75 (AWD models)
	E117	W/10	: To B101 (AWD models)
★	E122	SMJ	: VDC/TCS/ABS control unit (With VDC)
	E123	W/2	: Diode
	E124	W/2	: Diode
★	E125	W/8	: To M94 (2WD models)
	E126	W/4	: To B133 (2WD models)
	E129	BR/6	: Driving lamp relay-2

★ : Be sure to connect and lock the connectors securely after repair work. Failure to do so may cause the ECM to have diagnostic trouble codes. **Do not disconnect these connectors except in the case of working according to WORK FLOW of TROUBLE DIAGNOSES in EC and AT sections.**

TKIB0552E

ENGINE CONTROL HARNESS
A/T Models

★ : Be sure to connect and lock the connectors securely after repair work. Failure to do so may cause the ECM to have diagnostic trouble codes. **Do not disconnect these connectors except in the case of working according to WORK FLOW of TROUBLE DIAGNOSES in EC and AT sections.**

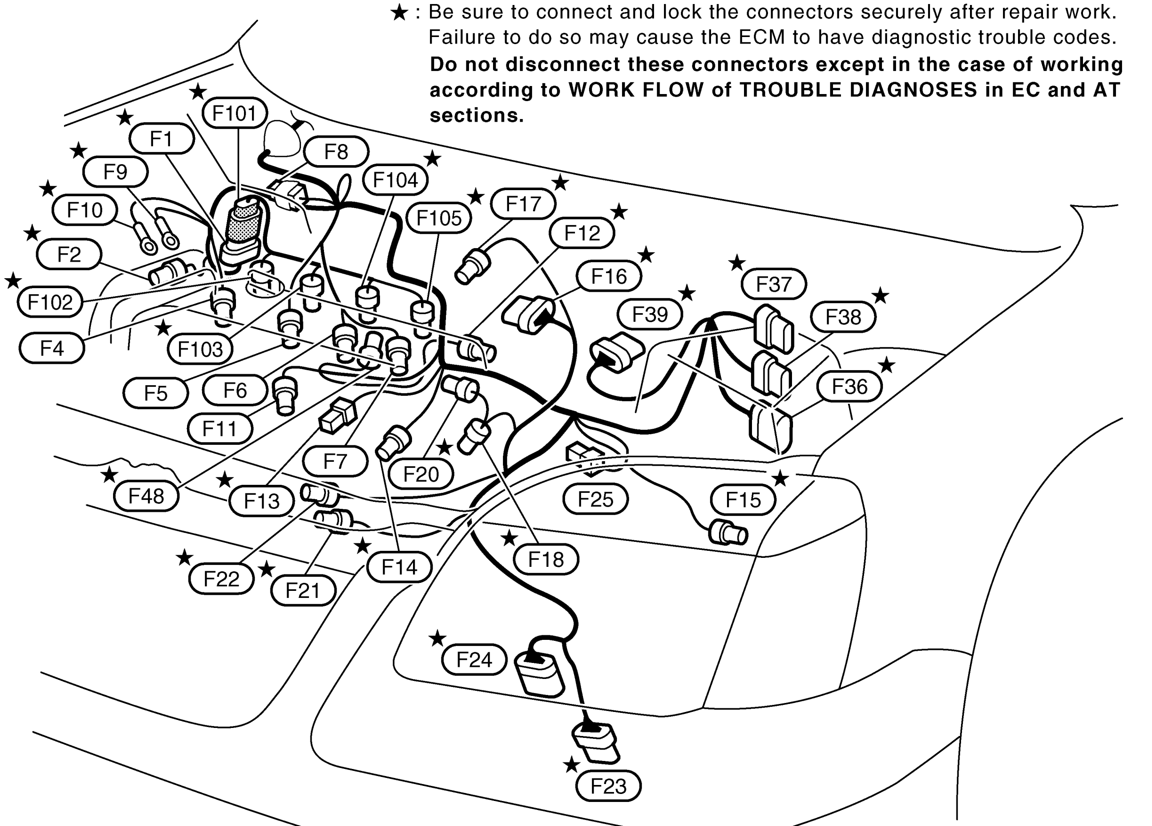

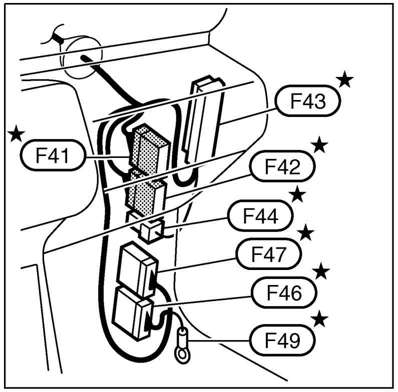

For detailed ground distribution information, refer to “GROUND DISTRIBUTION”

Engine ground

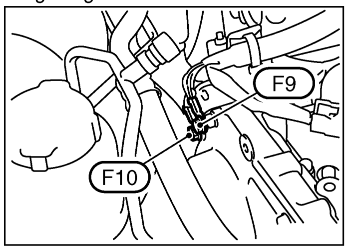

Body ground

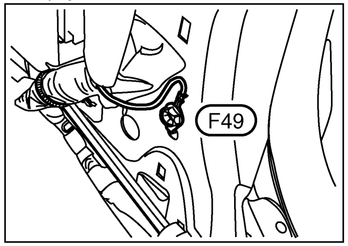

	Connector	Color/Pins		Description
★	F1	DGY/6	:	To F101
★	F2	G/2	:	Intake valve timing control solenoid valve
	F4	GY/3	:	Ignition coil No. 1 (With power transistor)
	F5	GY/3	:	Ignition coil No. 2 (With power transistor)
	F6	GY/3	:	Ignition coil No. 3 (With power transistor)
	F7	GY/3	:	Ignition coil No. 4 (With power transistor)
	F8	GY/2	:	Condenser
★	F9	–	:	Engine ground
★	F10	–	:	Engine ground
	F11	GY/1	:	Oil pressure switch
★	F12	B/3	:	Power steering pressure sensor
★	F13	B/2	:	Knock sensor
★	F14	B/3	:	Crankshaft position sensor (POS)
★	F15	B/3	:	Revolution sensor
★	F16	G/6	:	Electronic throttle control actuator
★	F17	L/2	:	EVAP canister purge volume control solenoid valve
★	F18	GY/2	:	Engine coolant temperature sensor
★	F20	B/3	:	Camshaft position sensor (PHASE)
★	F21	G/4	:	Heated oxygen sensor 1
★	F22	L/4	:	Heated oxygen sensor 2
★	F23	B/8	:	A/T solenoid valve
★	F24	B/10	:	Park/Neutral position switch
	F25	B/1	:	Starter motor
★	F36	GY/9	:	To E60
★	F37	GY/8	:	To E62
★	F38	DGY/8	:	To E61
★	F39	B/6	:	Mass air flow sensor
★	F41	BR/24	:	To M61
★	F42	W/16	:	To M62
★	F43	SMJ	:	ECM
★	F44	BR/6	:	ECM relay
★	F46	W/24	:	TCM (Transmission control module)
★	F47	GY/24	:	TCM (Transmission control module)
★	F48	BR/2	:	VIAS control solenoid valve
★	F49	–	:	Body ground

Engine control sub-harness

	Connector	Color/Pins		Description
★	F101	B/6	:	To F1
★	F102	GY/2	:	Fuel injector No. 1
★	F103	GY/2	:	Fuel injector No. 2
★	F104	GY/2	:	Fuel injector No. 3
★	F105	GY/2	:	Fuel injector No. 4

TKIB0553E

M/T Models

★ : Be sure to connect and lock the connectors securely after repair work. Failure to do so may cause the ECM to have diagnostic trouble codes. **Do not disconnect these connectors except in the case of working according to WORK FLOW of TROUBLE DIAGNOSES in EC and AT sections.**

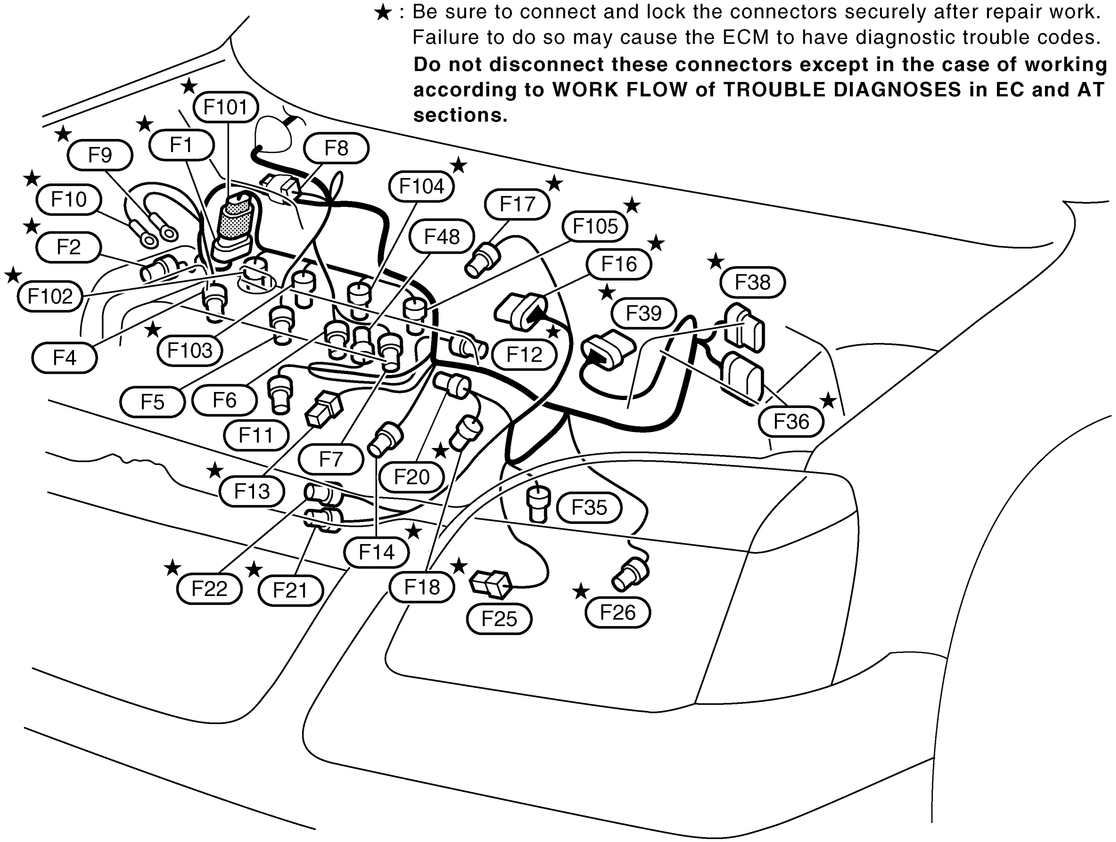

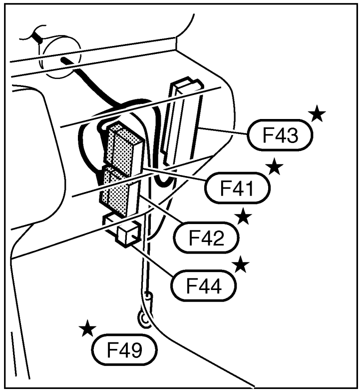

For detailed ground distribution information, refer to "GROUND DISTRIBUTION"

Engine ground

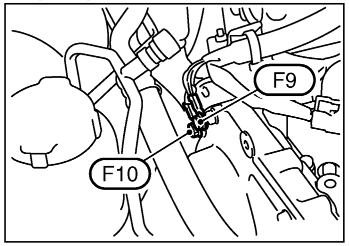

Body ground

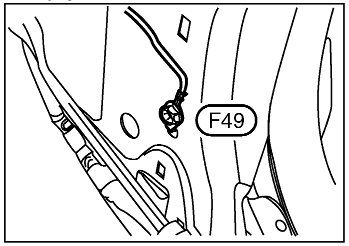

★	F1	DGY/6	To F101
★	F2	G/2	Intake valve timing control solenoid valve
	F4	GY/3	Ignition coil No. 1 (With power transistor)
	F5	GY/3	Ignition coil No. 2 (With power transistor)
	F6	GY/3	Ignition coil No. 3 (With power transistor)
	F7	GY/3	Ignition coil No. 4 (With power transistor)
	F8	GY/2	Condenser
★	F9	—	Engine ground
★	F10	—	Engine ground
	F11	GY/1	Oil pressure switch
★	F12	B/3	Power steering pressure sensor
★	F13	B/2	Knock sensor
★	F14	B/3	Crankshaft position sensor (POS)
★	F16	G/6	Electronic throttle control actuator
★	F17	L/2	EVAP canister purge volume control solenoid valve
★	F18	GY/2	Engine coolant temperature sensor
★	F20	B/3	Camshaft position sensor (PHASE)
★	F21	G/4	Heated oxygen sensor 1
★	F22	L/4	Heated oxygen sensor 2
	F25	B/1	Starter motor
★	F26	B/2	Park/Neutral position switch
	F35	B/2	Back-up lamp switch
★	F36	GY/9	To E60
★	F38	DGY/8	To E61
★	F39	B/6	Mass air flow sensor
★	F41	BR/24	To M61
★	F42	W/16	To M62
★	F43	SMJ	ECM
★	F44	BR/6	ECM relay
	F48	BR/2	VIAS control solenoid valve
★	F49	—	Body ground

Engine control sub-harness

★	F101	B/6	To F1
★	F102	GY/2	Fuel injector No. 1
★	F103	GY/2	Fuel injector No. 2
★	F104	GY/2	Fuel injector No. 3
★	F105	GY/2	Fuel injector No. 4

TKIB0554E

A B C D E F G H I J PG L M

BODY HARNESS

★	B1	W/10	To M17
★	B2	BR/20	To M18
	B3	W/6	To M16
	B4	W/3	Fuse block (J/B)
	B5	W/10	Fuse block (J/B)
	B6	BR/6	Rear window defogger relay
	B7	L/4	Fuel pump relay
	B8	–	Body ground
	B9	Y/2	Front LH side air bag module
	B10	W/3	Seat belt buckle switch (Driver side) (Without power seat)
	B11	GY/3	Heated seat LH (With heated seat and without power seat)
	B14	Y/12	Air bag diagnosis sensor unit
	B15	Y/2	LH side air bag (Satellite) sensor
	B16	W/3	Front door switch (Driver side)
	B17	W/8	To D31
	B18	–	Body ground
	B19	Y/2	Front LH seat belt pre-tensioner
	B20	W/1	Rear door switch LH
	B22	W/6	To B128
	B23	B/2	Rear power socket
	B24	W/6	Rear combination lamp RH
	B26	W/6	To D51
	B27	W/3	To D52
	B28	W/6	Rear combination lamp LH
★	B31	GY/5	Fuel level sensor unit and fuel pump
	B33	W/2	Condenser
	B41	W/6	Front power seat (Driver side) (With power seat)
	B42	GY/2	Rear side marker lamp RH
	B43	GY/2	Rear side marker lamp LH
★	B44	B/2	EVAP canister vent control valve
★	B45	GY/3	EVAP control system pressure sensor

★ : Be sure to connect and lock the connectors securely after repair work. Failure to do so may cause the ECM to have diagnostic trouble codes. **Do not disconnect these connectors except in the case of working according to WORK FLOW of TROUBLE DIAGNOSES in EC and AT sections.**

Body ground

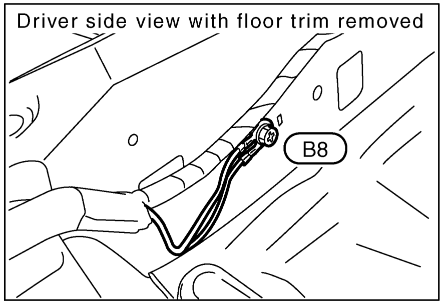

Body ground

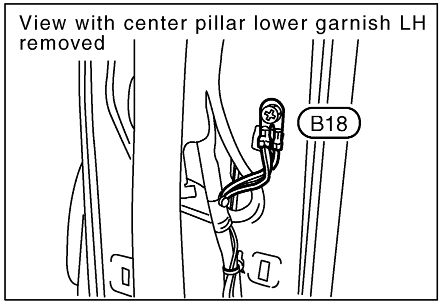

For detailed ground distribution information, refer to "GROUND DISTRIBUTION".

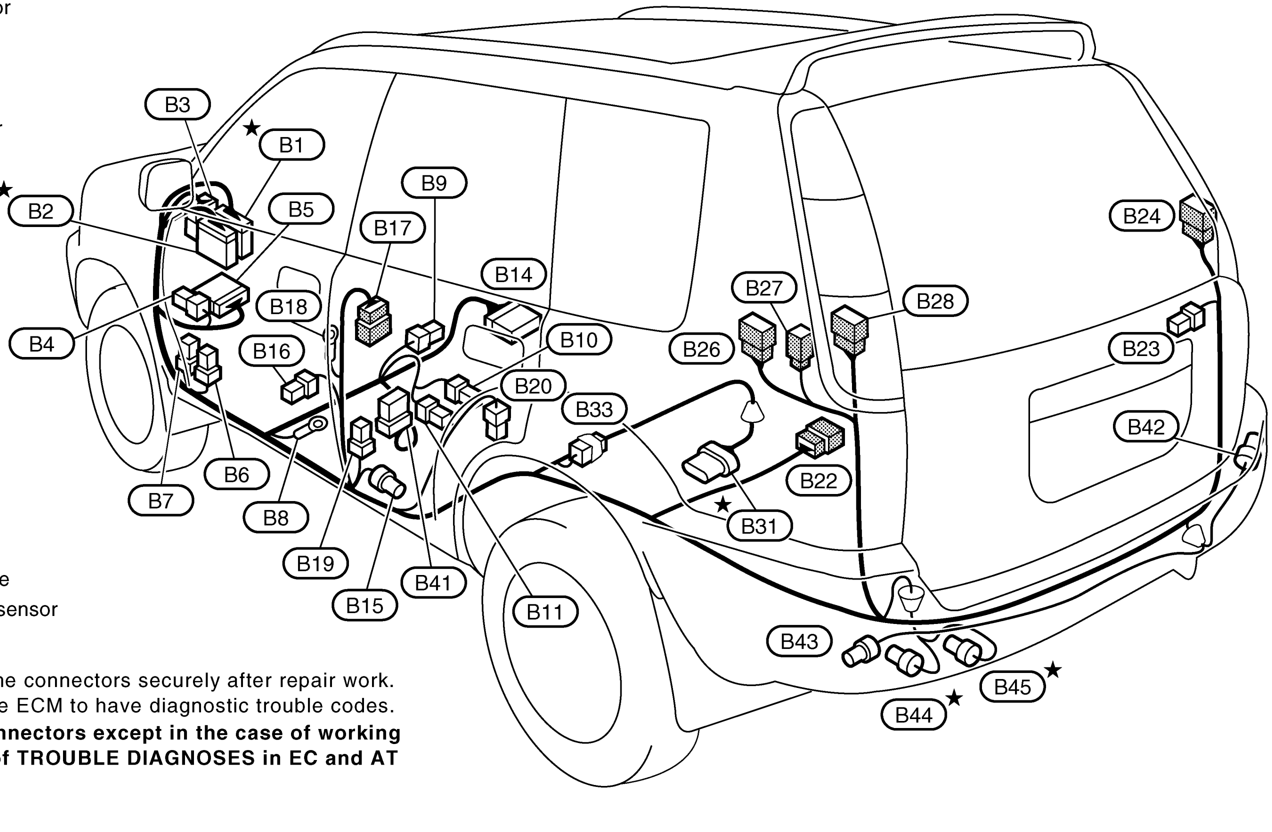

TKIB0555E

BODY NO. 2 HARNESS

B101	W/10	:	To E117 (AWD models)
B105	W/12	:	To M78
B106	W/10	:	To M79
B107	—	:	Body ground
B109	Y/2	:	Front RH side air bag module
B110	GY/3	:	Heated seat RH (With heated seat)
B112	B/6	:	Yaw rate/side G sensor (With VDC)
B114	B/1	:	Parking brake switch
B115	Y/12	:	Air bag diagnosis sensor unit
B116	Y/2	:	RH side air bag (Satellite) sensor
B117	Y/2	:	Front RH seat belt pre-tensioner
B118	W/3	:	Front door switch (Passenger side)
B119	—	:	Body ground
B120	W/8	:	To D21
B121	W/1	:	Rear door switch RH
B125	GY/4	:	Sub fuel level sensor unit
B126	L/2	:	Rear wheel sensor LH
B128	W/6	:	To B22
B129	B/2	:	To B151 (AWD models)
B130	GY/2	:	Rear wheel sensor RH
B131	W/8	:	Heated seat switch (With heated seat)
B133	W/4	:	To E126 (2WD models)

Transmission sub-harness

B151	B/2	:	To B129 (AWD models)
B152	GY/2	:	AWD solenoid (AWD models)

Body ground

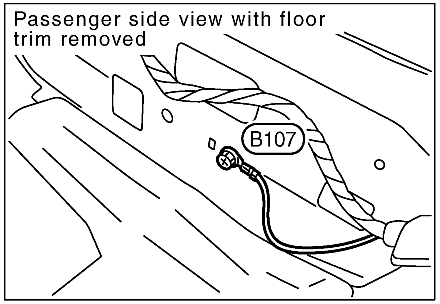

Body ground

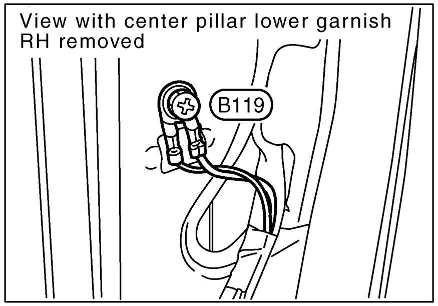

For detailed ground distribution information, refer to “GROUND DISTRIBUTION”.

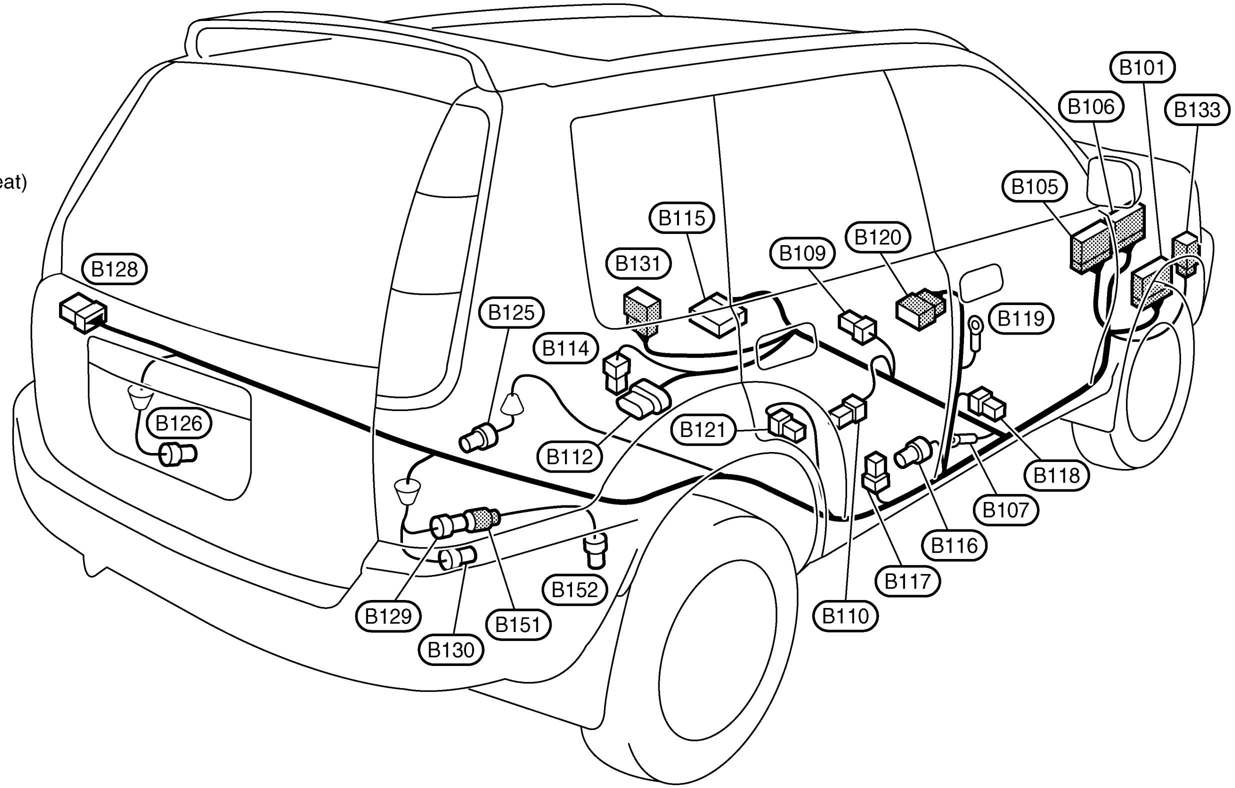

TKIB0556E

A B C D E F G H I J PG L M

ROOM LAMP HARNESS

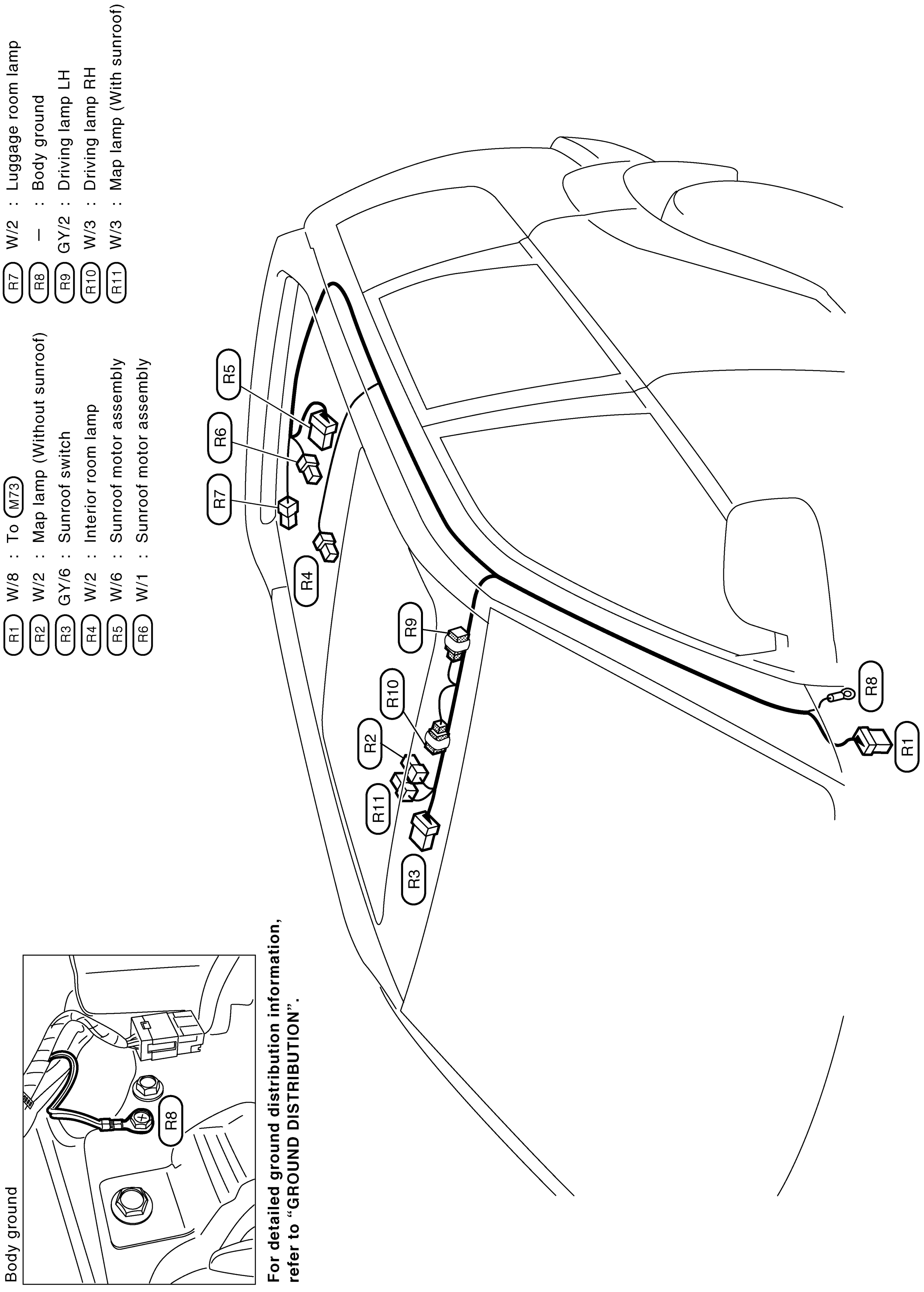

TKIB0546E

FRONT DOOR HARNESS

LH Side

D1	W/16	:	To M21
D2	BR/12	:	To M22
D3	W/8	:	Door mirror actuator (Driver side)
D4	W/2	:	Front door speaker LH
D5	GY/6	:	Front power window motor (Driver side)
D6	W/3	:	Power window main switch
D7	W/16	:	Power window main switch
D8	BR/3	:	Door key cylinder switch (Driver side)
D9	GY/4	:	Front door lock actuator (Driver side)
D10	W/2	:	Step lamp (Driver side)

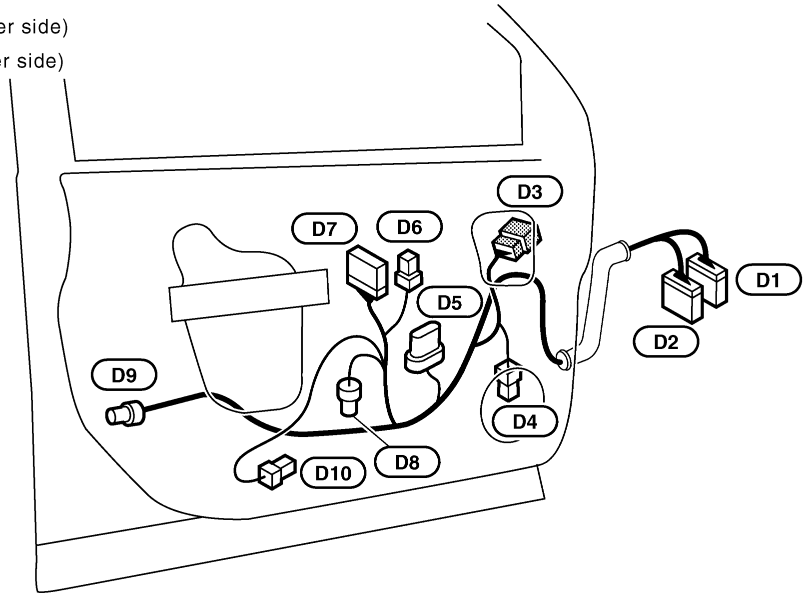

TKIB0031E

RH Side

D11	W/12	:	To M77
D12	BR/12	:	To M76
D13	BR/2	:	Front power window motor (Passenger side)
D14	W/8	:	Door mirror actuator (Passenger side)
D15	W/2	:	Front door speaker RH
D16	W/8	:	Front power window switch (Passenger side)
D17	GY/4	:	Front door lock actuator (Passenger side)
D18	BR/3	:	Door key cylinder switch (Passenger side)
D19	W/2	:	Step lamp (Passenger side)
D20	GY/8	:	Door lock/unlock switch (Passenger side)
D27	W/2	:	Diode

Diode D27

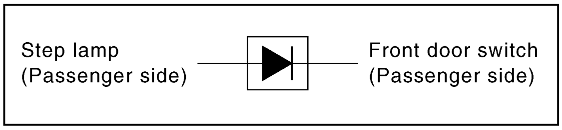

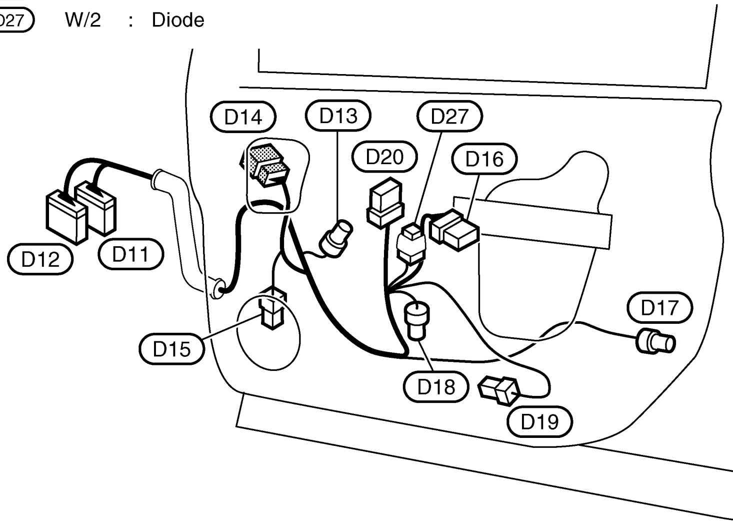

TKIB0557E

REAR DOOR HARNESS

LH Side

D31	W/8	:	To B17
D32	BR/2	:	Rear power window motor LH
D33	W/2	:	Rear door speaker LH
D34	W/8	:	Rear power window switch LH
D36	GY/4	:	Rear door lock actuator LH

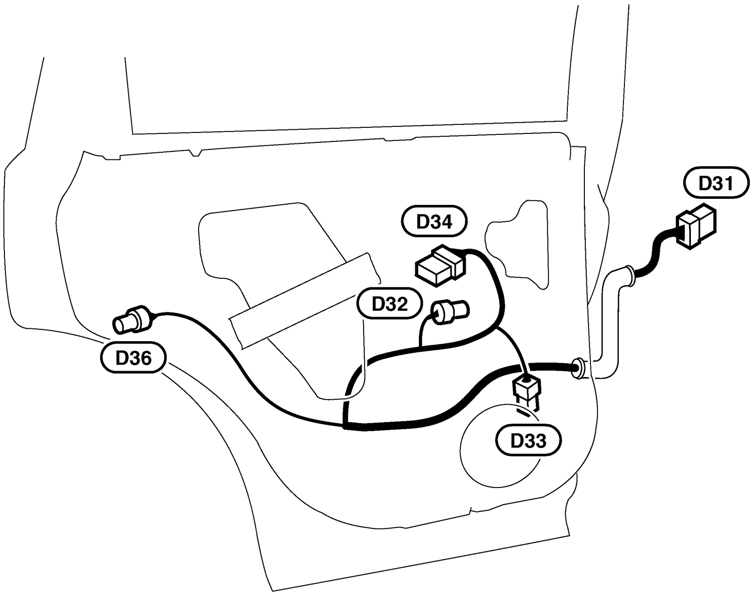

TKIB0054E

RH Side

D21	W/8	:	To B120
D22	BR/2	:	Rear power window motor RH
D23	W/2	:	Rear door speaker RH
D24	W/8	:	Rear power window switch RH
D26	GY/4	:	Rear door lock actuator RH

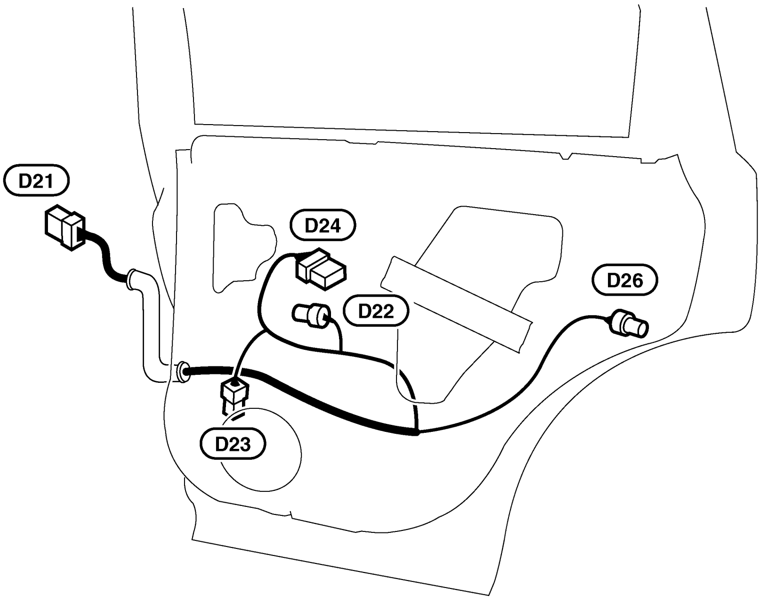

TKIB0055E

BACK DOOR HARNESS

Back door harness

D41	W/6	: To D57
D42	B/2	: To D56
D43	W/4	: Rear wiper motor
D44	W/2	: License plate lamp
D45	W/3	: Back door switch
D46	W/4	: Back door lock actuator

Back door sub-harness

D51	W/6	: To B26
D52	W/3	: To B27
D53	–	: Body ground
D54	W/1	: Rear window defogger (+)
D55	W/2	: High-mounted stop lamp
D56	B/2	: To D42
D57	W/6	: To D41

Rear window defogger harness

D61	W/1	: Rear window defogger (–)
D62	–	: Body ground

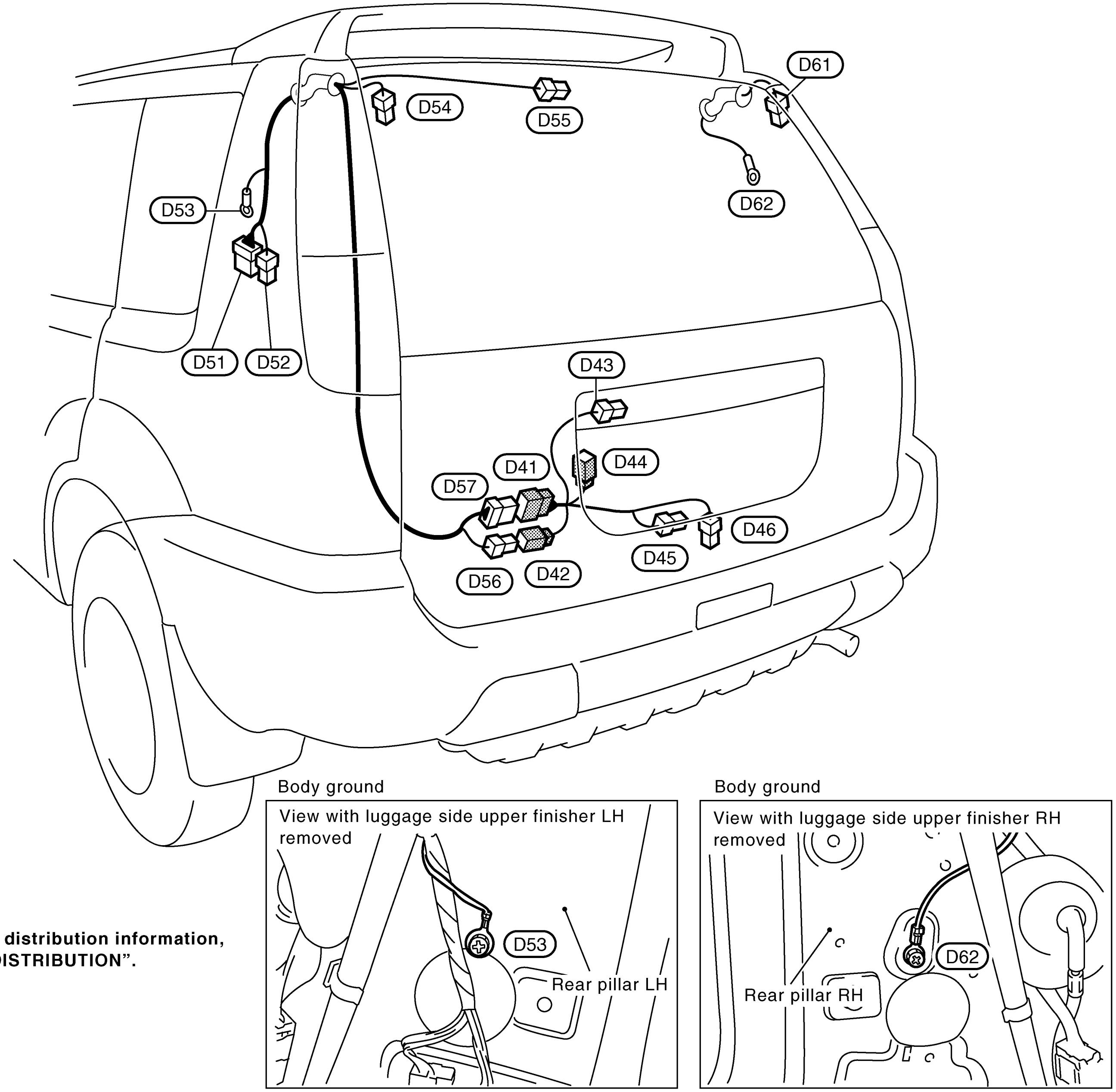

For detailed ground distribution information, refer to "GROUND DISTRIBUTION".

TKIB0558E

Wiring Diagram Codes (Cell Codes)

AKS00BEY

Use the chart below to find out what each wiring diagram code stands for.
Refer to the wiring diagram code in the alphabetical index to find the location (page number) of each wiring diagram.

Code	Section	Wiring Diagram Name
1STSIG	AT	A/T 1st Signal
2NDSIG	AT	A/T 2nd Signal
3RDSIG	AT	A/T 3rd Signal
4THSIG	AT	A/T 4th Signal
A/C	ATC	Auto Air Conditioner
A/C	MTC	Manual Air Conditioner
ABS	BRC	Anti-Lock Brake System
APPS1	EC	Accelerator Pedal Position Sensor
APPS2	EC	Accelerator Pedal Position Sensor
APPS3	EC	Accelerator Pedal Position Sensor
ASC/BS	EC	Automatic Speed Control Device (ASCD) Brake Switch
ASC/SW	EC	Automatic Speed Control Device (ASCD) Steering Switch
ASCBOF	EC	Automatic Speed Control Device (ASCD) Brake Switch
ASCIND	EC	Automatic Speed Control Device (ASCD) Indicator
AT/IND	DI	A/T Indicator Lamp
AUDIO	AV	Audio
AWD	TF	AWD System
BA/FTS	AT	A/T Fluid Temperature Sensor and TCM Power Supply
BACK/L	LT	Back-Up Lamp
BRK/SW	EC	Brake Switch
CAN	AT	CAN Communication Line
CAN	EC	CAN Communication Line
CAN	LAN	CAN System
CHARGE	SC	Charging System
CHIME	DI	Warning Chime
CLOCK	DI	Clock
COOL/F	EC	Cooling Fan Control
D/LOCK	BL	Power Door Lock
DEF	GW	Rear Window Defogger
DTRL	LT	Headlamp - With Daytime Light System
ECM/PW	EC	ECM Power Supply for Back-Up
ECTS	EC	Engine Coolant Temperature Sensor
ENGSS	AT	Engine Speed Signal
ETC1	EC	Electric Throttle Control Function
ETC2	EC	Electric Throttle Control Motor Relay
ETC3	EC	Electric Throttle Control Motor
F/FOG	LT	Front Fog Lamp
F/PUMP	EC	Fuel Pump
FTS	AT	A/T Fluid Temperature Sensor Circuit
FTTS	EC	Fuel Tank Temperature Sensor
FUEL	EC	Fuel Injection System Function

Code	Section	Wiring Diagram Name
HO2S1	EC	Heated Oxygen Sensor 1
HO2S1H	EC	Heated Oxygen Sensor 1 Heater
HO2S2	EC	Heated Oxygen Sensor 2
HO2S2H	EC	Heated Oxygen Sensor 2 Heater
HORN	WW	Horn
HSEAT	SE	Heated Seat
IATS	EC	Intake Air Temperature Sensor
IGNSYS	EC	Ignition System
ILL	LT	Illumination
INJECT	EC	Injector
INT/L	LT	Map Lamp
IVC	EC	Intake Valve Timing Control Solenoid Valve
KEYLES	BL	Remote Keyless Entry System
KS	EC	Knock Sensor
LOAD	EC	Electrical Load Signal
LPSV	AT	Line Pressure Solenoid Valve
MAFS	EC	Mass Air Flow Sensor
MAIN	AT	Main Power Supply and Ground Circuit
MAIN	EC	Main Power Supply and Ground Circuit
METER	DI	Speedometer, Tachometer, Temp. and Fuel Gauges
MIL/DL	EC	MIL & Data Link Connector
MIRROR	GW	Door Mirror
NATS	BL	Nissan Anti-Theft System
NAVI	AV	Navigation System
NONDTC	AT	Non-Detective Items
OVRCSV	AT	Overrun Clutch Solenoid Valve
P/SCKT	WW	Power Socket
PGC/V	EC	EVAP Canister Purge Volume Control Solenoid Valve
PHASE	EC	Camshaft Position Sensor (PHASE)
PNP/SW	AT	Park/Neutral Position Switch
PNP/SW	EC	Park/Neutral Position Switch
POS	EC	Crankshaft Position Sensor (CKPS) (POS)
POWER	PG	Power Supply Routing
PRE/SE	EC	EVAP Control System Pressure Sensor
PS/SEN	EC	Power Steering Pressure Sensor
ROOM/L	LT	Interior Room Lamp
RP/SEN	EC	Refrigerant Pressure Sensor
SEAT	SE	Power Seat
SEN/PW	EC	Sensor Power Supply
SHIFT	AT	A/T Shift Lock System
SNOWSW	EC	Snow Mode Switch
SROOF	RF	Sunroof
SRS	SRS	Supplemental Restraint System
SSV/A	AT	Shift Solenoid Valve A

Code	Section	Wiring Diagram Name
SSV/B	AT	Shift Solenoid Valve B
START	SC	Starting System
STEP/L	LT	Step Lamp
STOP/L	LT	Stop Lamp
TAIL/L	LT	Parking, License and Tail Lamps
TCCSIG	AT	A/T Tcc S/V Function (Lock-Up)
TCV	AT	Torque Converter Clutch Solenoid Valve
TPS	AT	Throttle Position Sensor
TPS1	EC	Throttle Position Sensor (Sensor 1)
TPS2	EC	Throttle Position Sensor (Sensor 2)
TPS3	EC	Throttle Position Sensor
TURN	LT	Turn Signal and Hazard Warning Lamp
VDC	BRC	Vehicle Dynamics Control System
VEHSEC	BL	Vehicle Security System
VENT/V	EC	EVAP Canister Vent Control Valve
VIAS	EC	Variable Induction Air Control System
VIAS/V	EC	VIAS Control Solenoid Valve
VSSA/T	AT	Vehicle Speed Sensor A/T (Revolution Sensor)
VSSMTR	AT	Vehicle Speed Sensor MTR
WARN	DI	Warning Lamps
WINDOW	GW	Power Window
WIP/R	WW	Rear Wiper and Washer
WIPER	WW	Front Wiper and Washer

ELECTRICAL UNITS LOCATION

PFP:25230

Electrical Units Location

AKS00BEZ

ENGINE COMPARTMENT

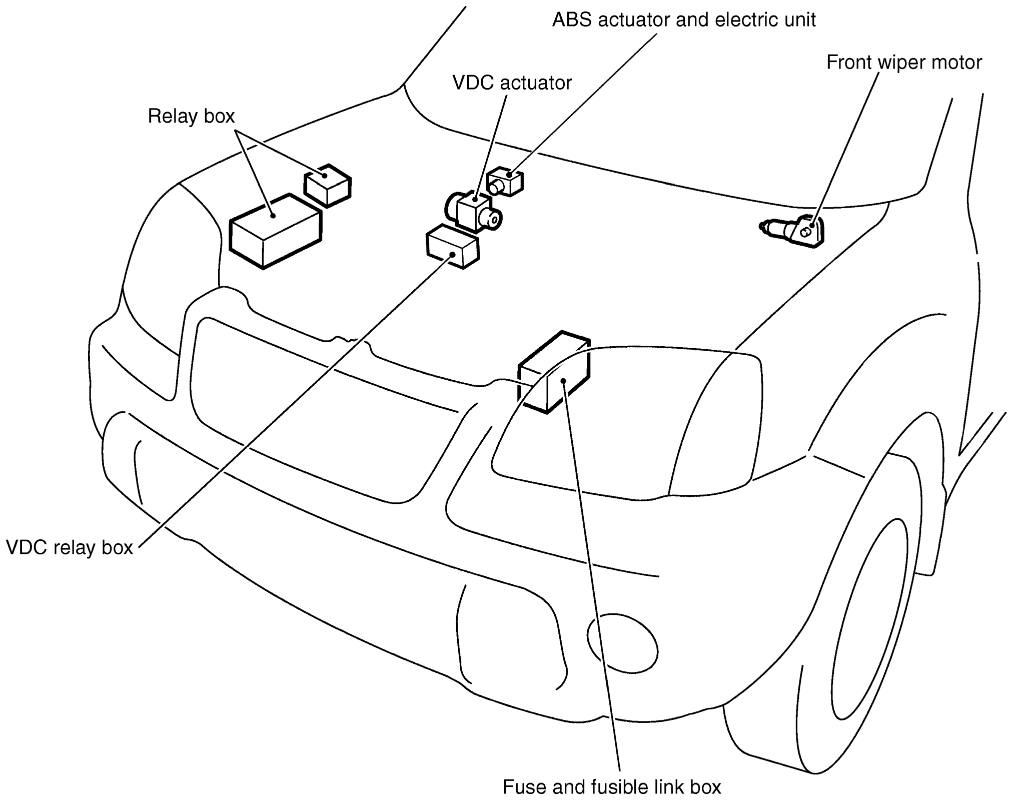

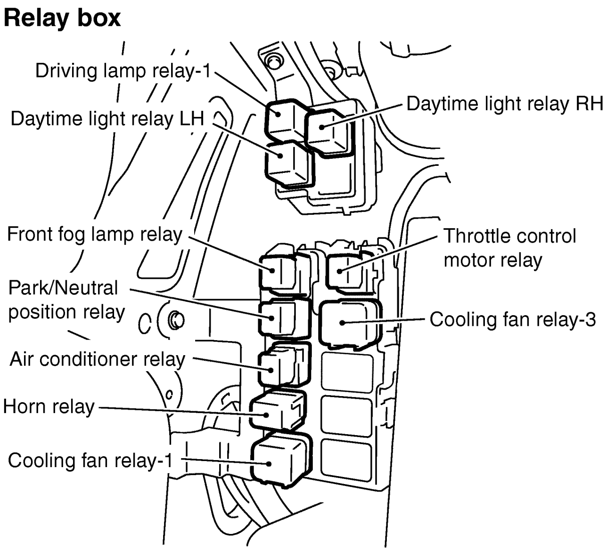

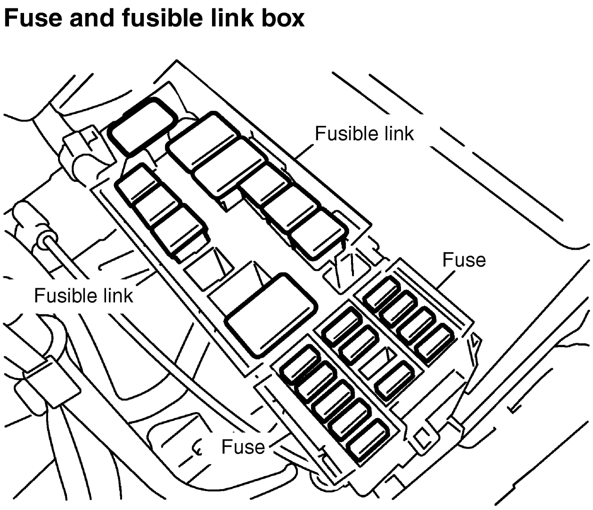

CKIB0277E

PASSENGER COMPARTMENT

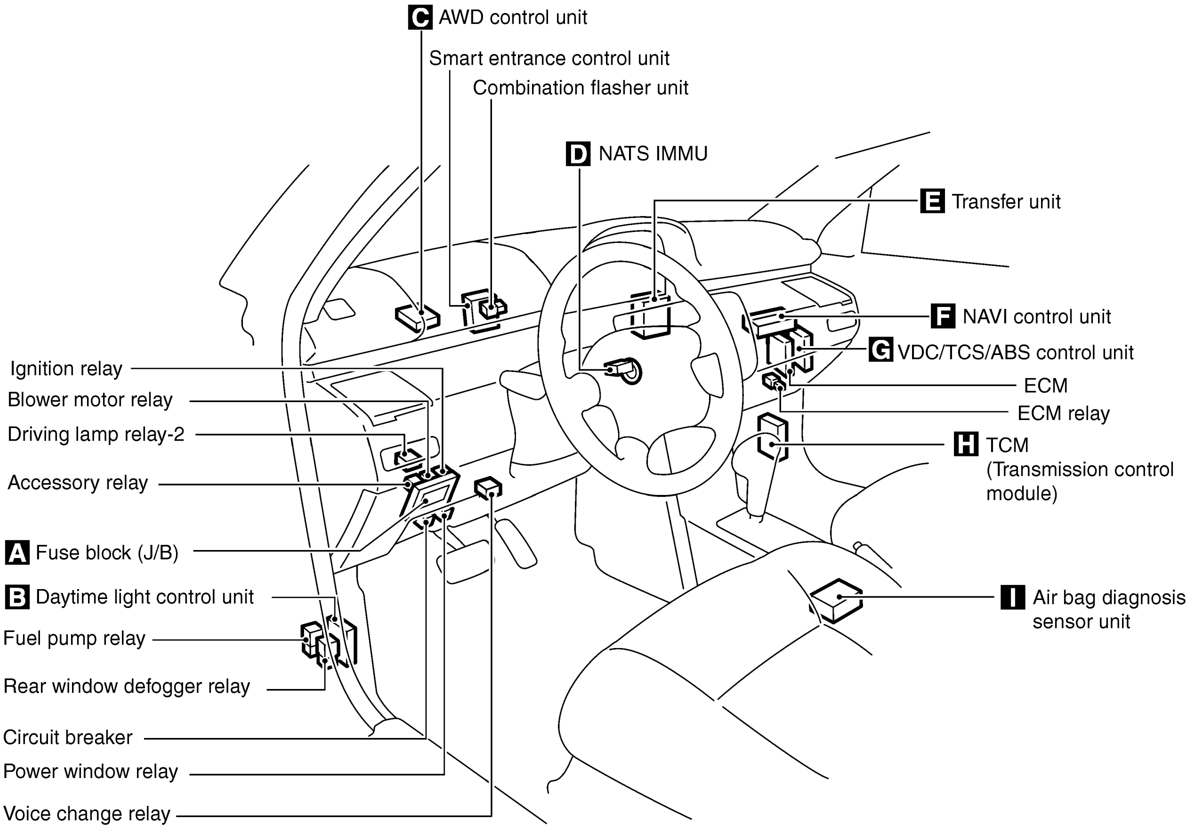

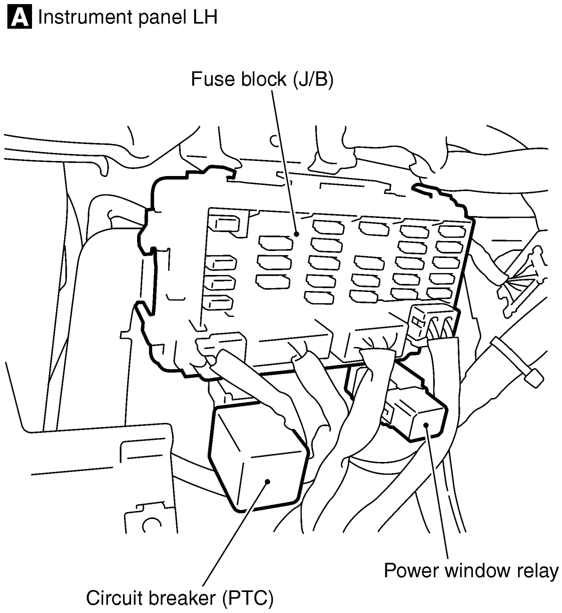

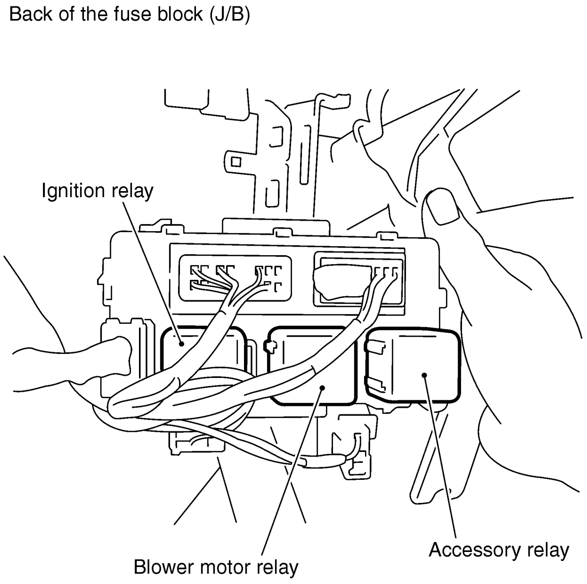

CKIB0278E

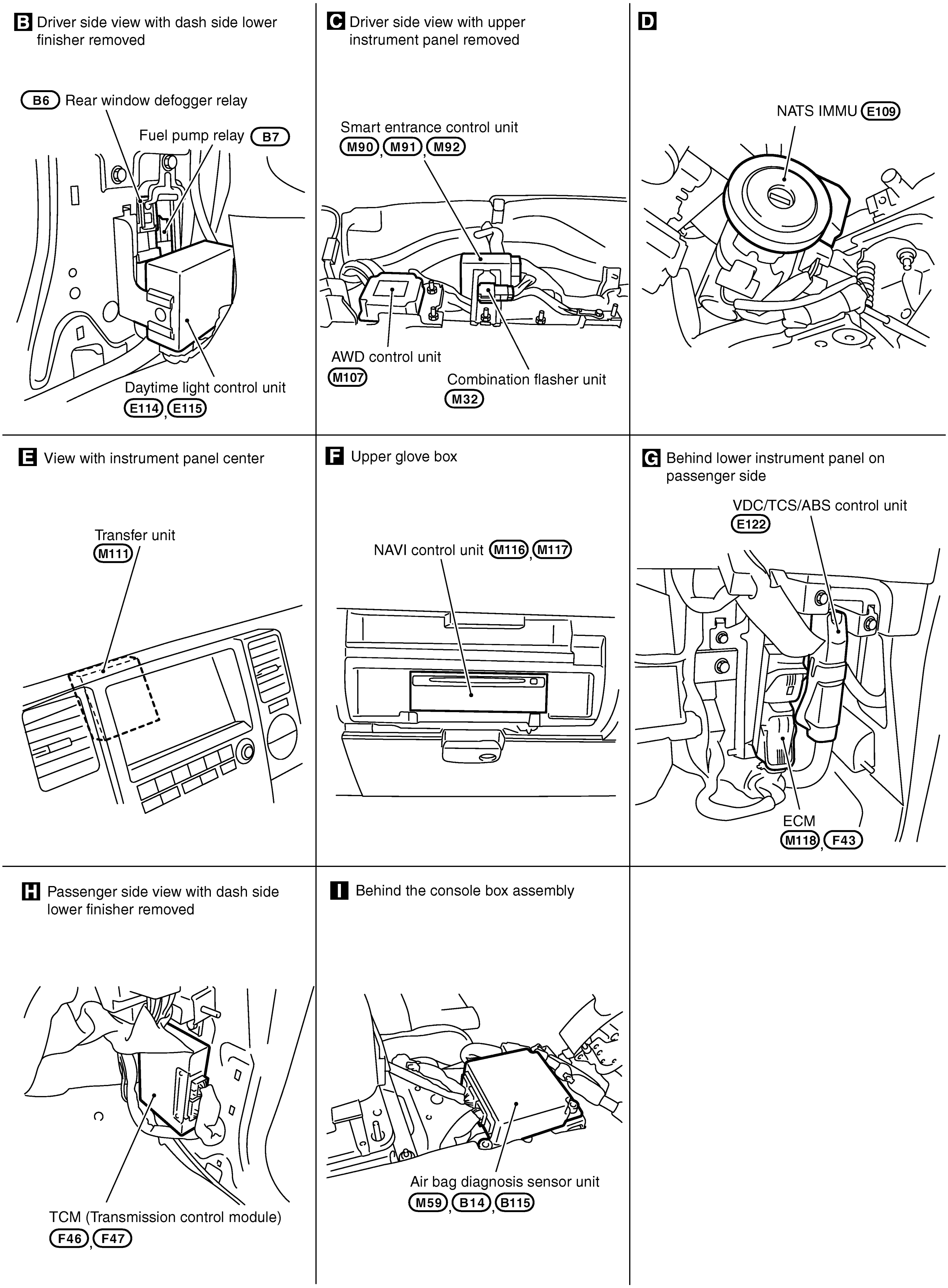
B Driver side view with dash side lower finisher removed
B6 Rear window defogger relay
Fuel pump relay B7
Daytime light control unit
E114, E115
C Driver side view with upper instrument panel removed
Smart entrance control unit
M90, M91, M92
AWD control unit
M107
Combination flasher unit
M32
D
NATS IMMU E109
E View with instrument panel center
Transfer unit
M111
F Upper glove box
NAVI control unit M116, M117
G Behind lower instrument panel on passenger side
VDC/TCS/ABS control unit
E122
ECM
M118, F43
H Passenger side view with dash side lower finisher removed
TCM (Transmission control module)
F46, F47
I Behind the console box assembly
Air bag diagnosis sensor unit
M59, B14, B115

CKIB0279E

HARNESS CONNECTOR

PFP:00011

Description

AKS00BF0

HARNESS CONNECTOR (TAB-LOCKING TYPE)

- The tab-locking type connectors help prevent accidental looseness or disconnection.
- The tab-locking type connectors are disconnected by pushing or lifting the locking tab(s). Refer to the figure below.

Refer to the next page for description of the slide-locking type connector.

CAUTION:

Do not pull the harness or wires when disconnecting the connector.

[Example]

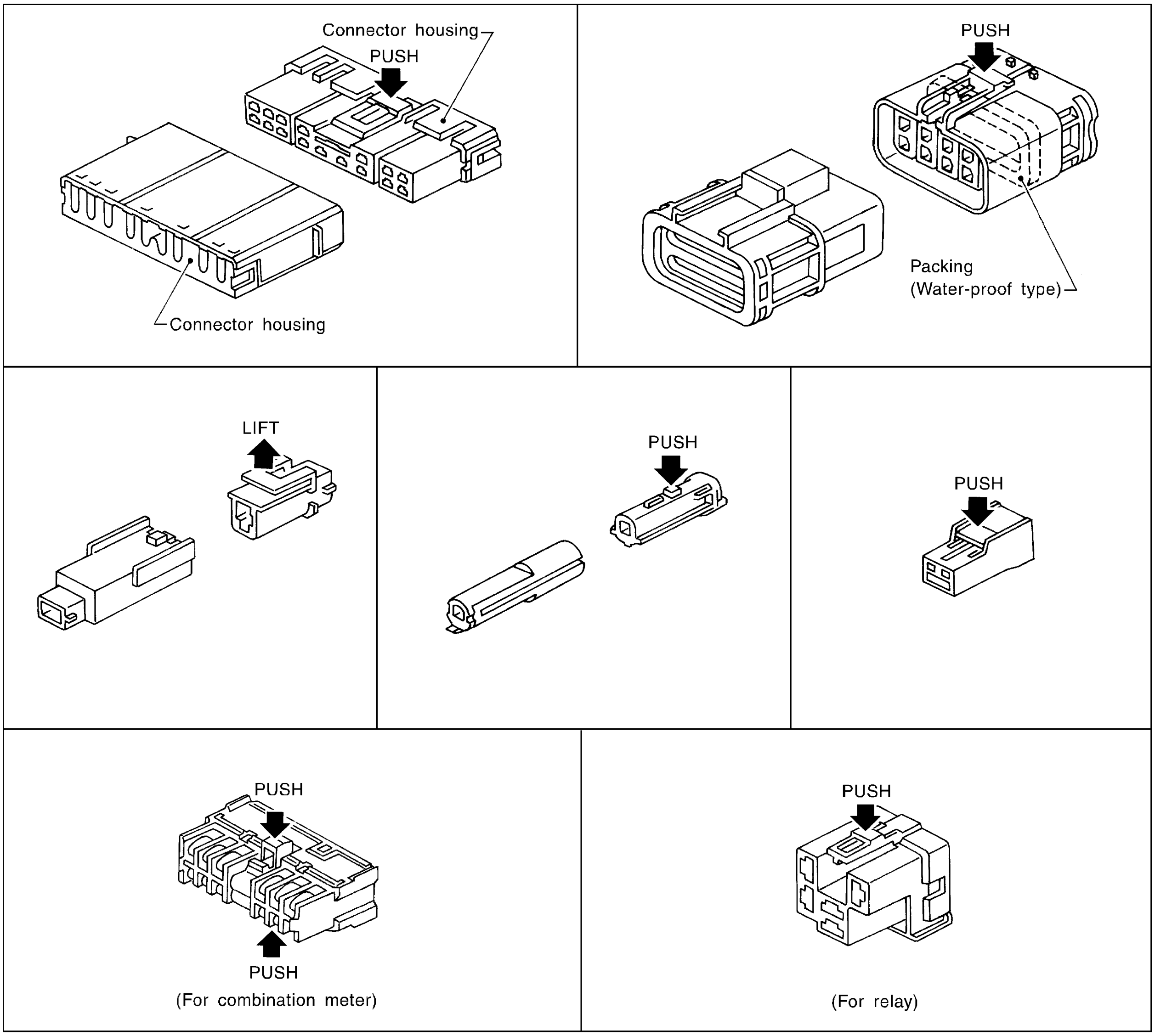

HARNESS CONNECTOR (SLIDE-LOCKING TYPE)

- A new style slide-locking type connector is used on certain systems and components, especially those related to OBD.
- The slide-locking type connectors help prevent incomplete locking and accidental looseness or disconnection.
- The slide-locking type connectors are disconnected by pushing or pulling the slider. Refer to the figure below.

CAUTION:

- **Do not pull the harness or wires when disconnecting the connector.**
- **Be careful not to damage the connector support bracket when disconnecting the connector.**

[Example]

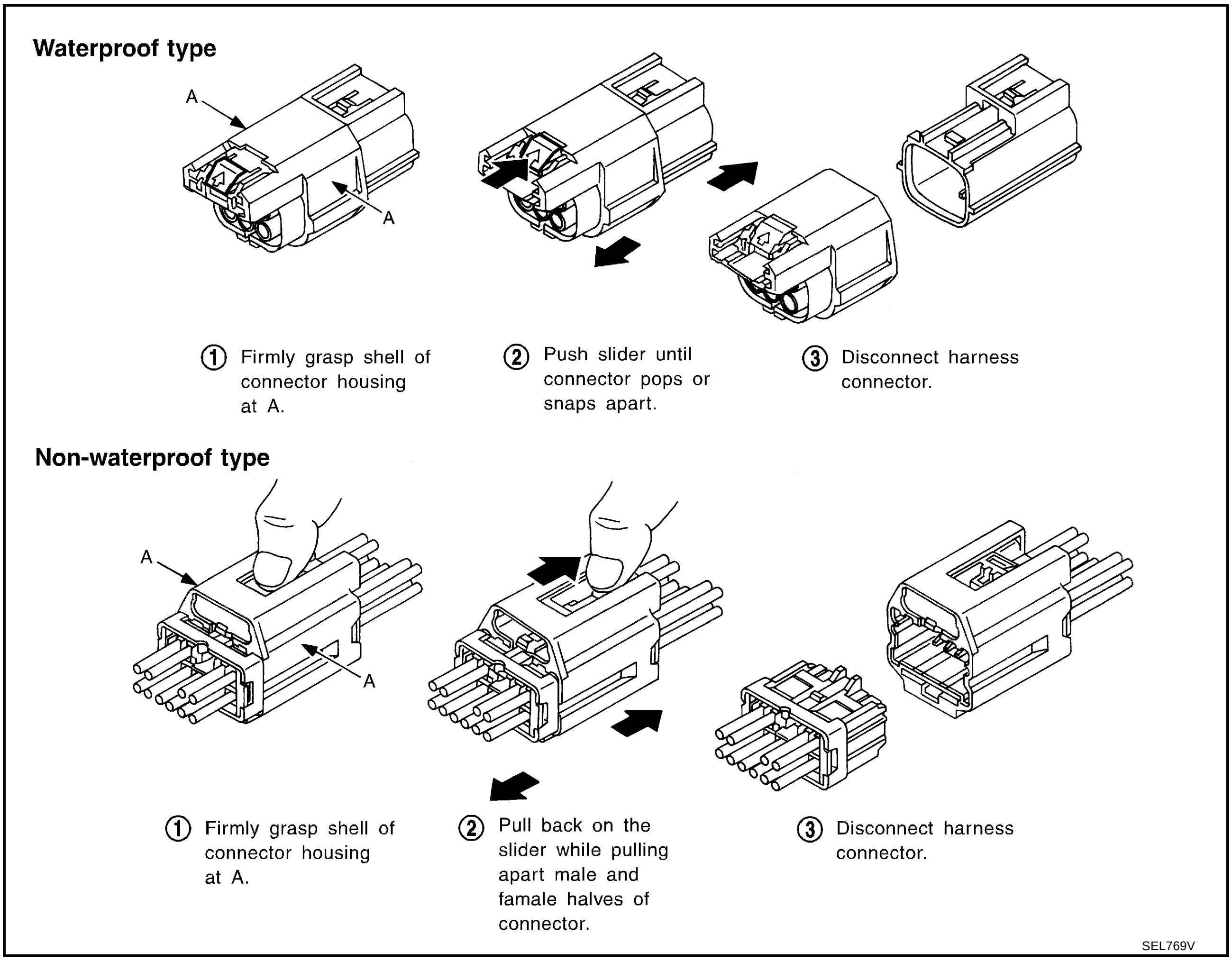

ELECTRICAL UNITS

PFP:00011

Terminal Arrangement

AKS00BF1

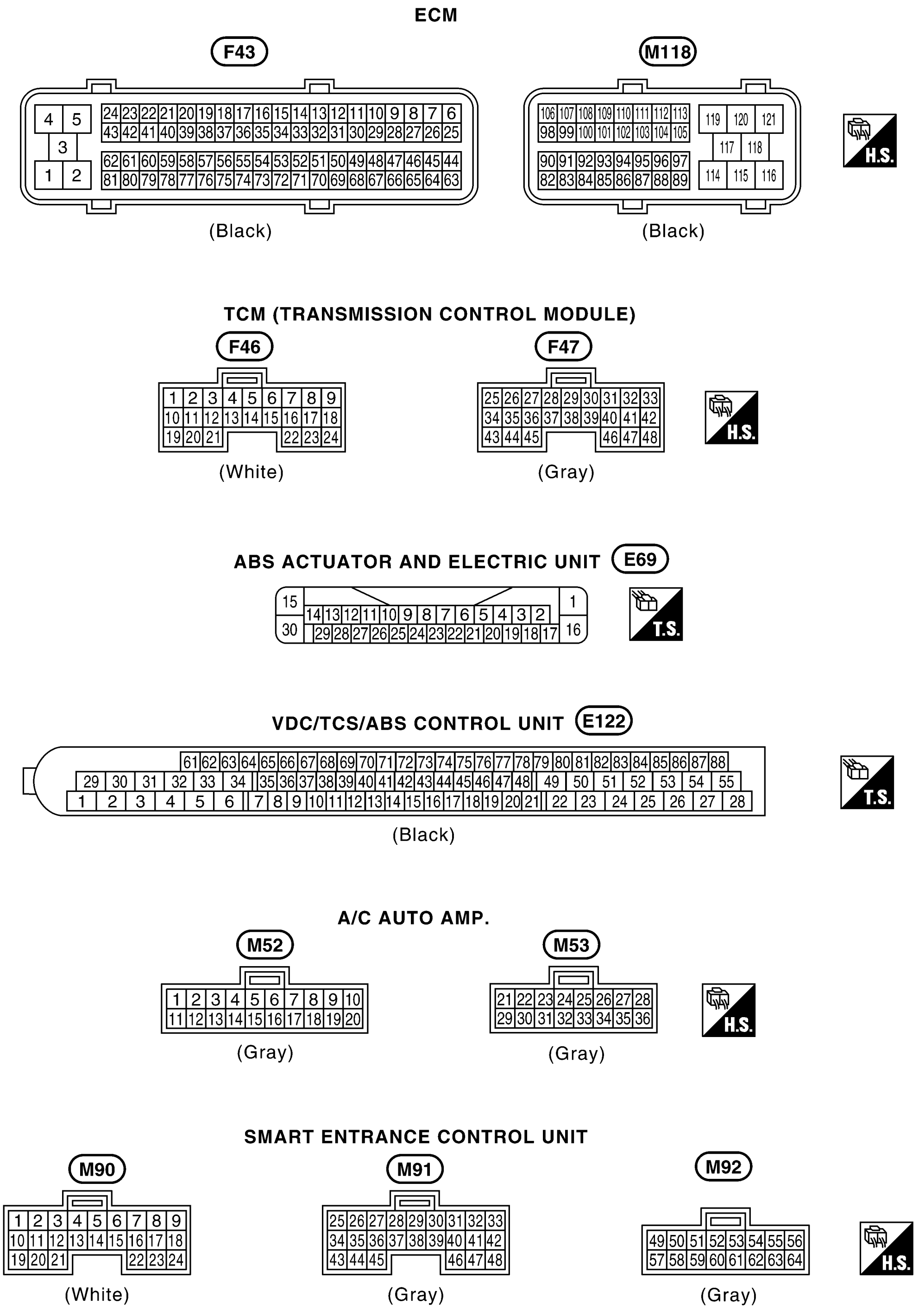

CKIB0036E

STANDARDIZED RELAY

PFP:00011

Description

AKS00BF2

NORMAL OPEN, NORMAL CLOSED AND MIXED TYPE RELAYS

Relays can mainly be divided into three types: normal open, normal closed and mixed type relays.

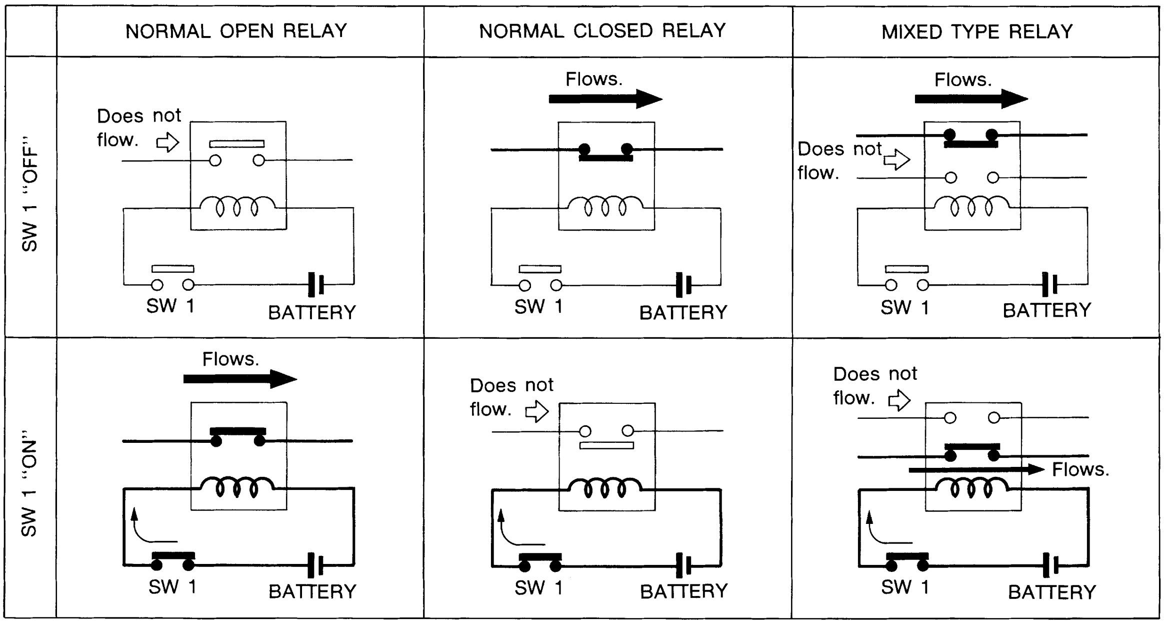

SEL881H

TYPE OF STANDARDIZED RELAYS

1M	1 Make	2M	2 Make
1T	1 Transfer	1M·1B	1 Make 1 Break

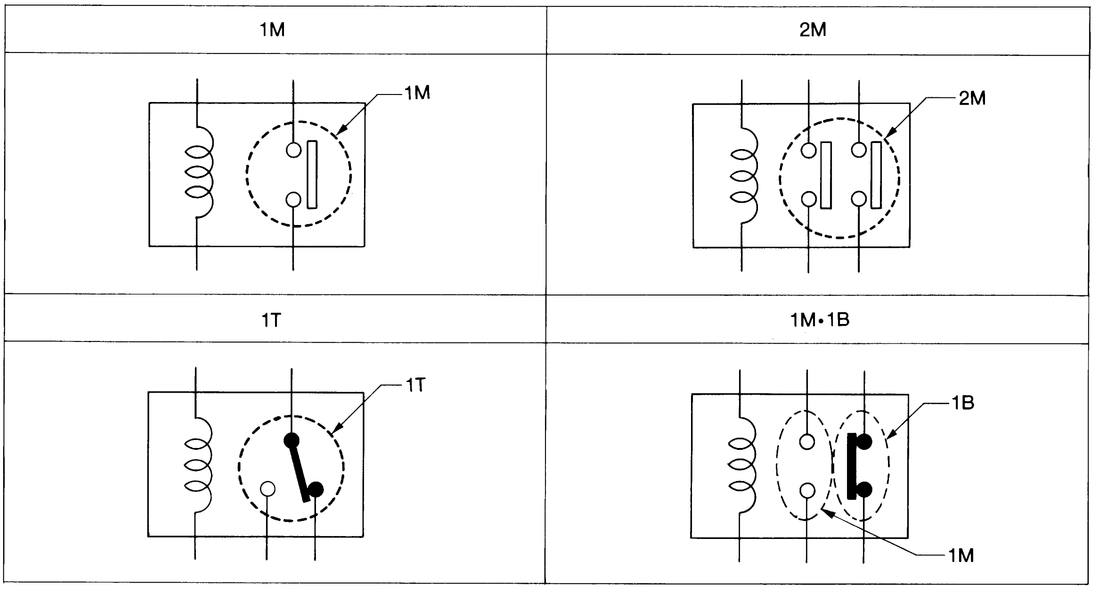

SEL882H

Type	Outer view	Circuit	Connector symbol and connection	Case color
1T	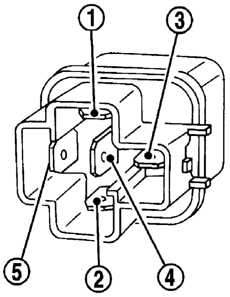	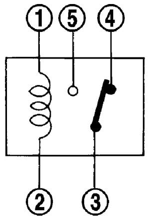	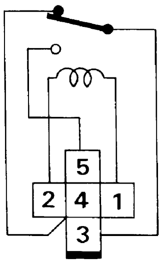	BLACK
2M	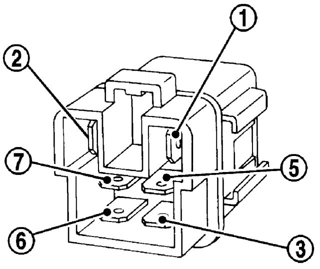	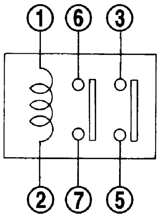	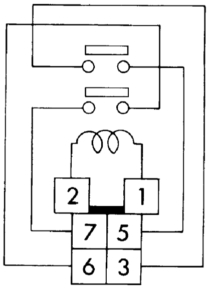	BROWN
1M•1B	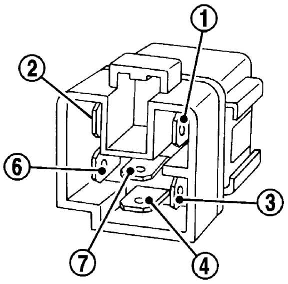	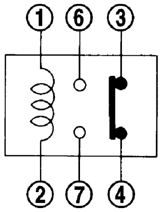	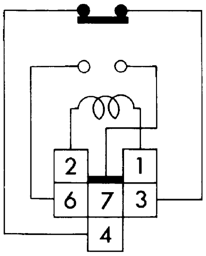	GRAY
1M	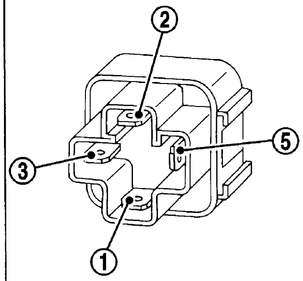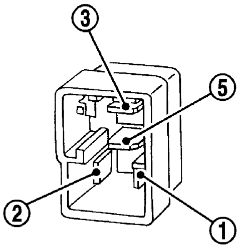	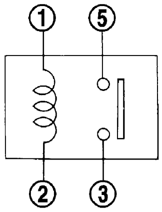	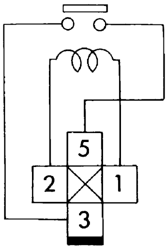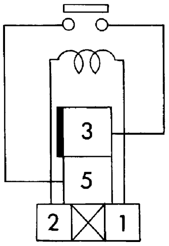	BLUE

The arrangement of terminal numbers on the actual relays may differ from those shown above.

SEL188W

FUSE BLOCK - JUNCTION BOX (J/B)

PFP:24350

Terminal Arrangement

AKS00BF3

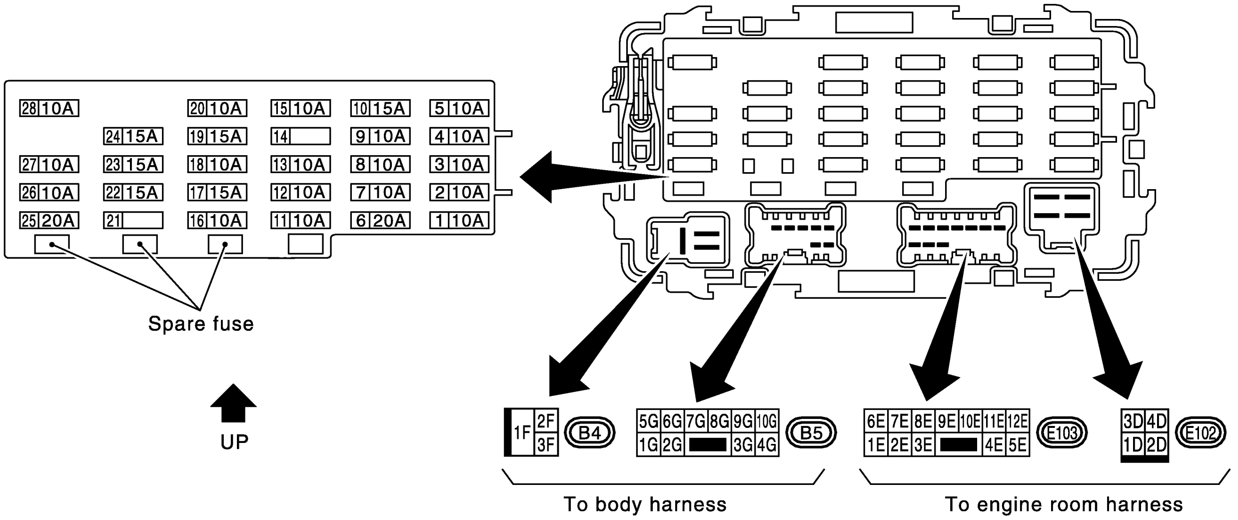

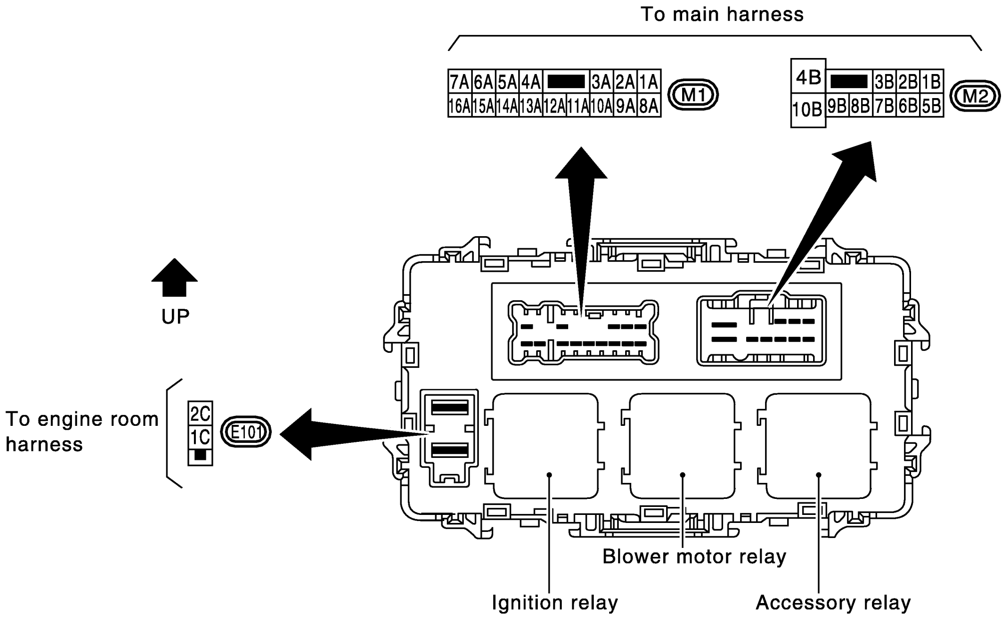

CKIB0038E

FUSE AND FUSIBLE LINK BOX

PFP:24381

Terminal Arrangement
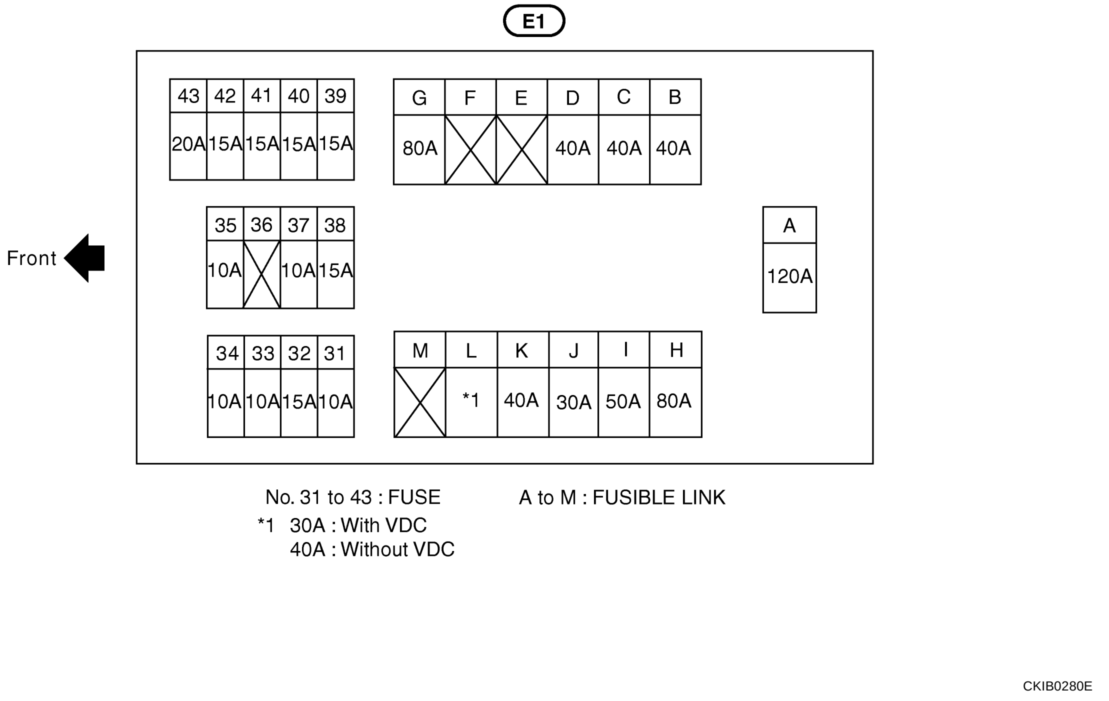
AKS00BF4